DECS-2100 Digital Excitation Control System

Overview

The DECS-2100 is an extremely powerful and flexible excitation system that precisely controls, protects, and monitors synchronous generators and motors. Its multifunctional design allows it to operate in a wide range of applications providing excitation currents up to 10,000 Adc. BESTCOMS™*Pro* software complements the DECS-2100 by embedding many time-saving tools such as programmable logic, integrated simulator, and system monitoring.

Features

- Multi-microprocessor-based design.
- ±0.1% voltage regulation accuracy.
- Control modes with autotracking and dual gain settings:
- AVR, VAR, PF, and Manual (field current and voltage regulation)
- Dual channel and dual channel with supervisory control (options).
- Six-SCR (silicon-controlled rectifier) power rectifier bridges: fixed and drawer type (options).
- Power drawers with online maintenance capabilities in an N+1, 2, 3... configuration.
- Multi-bridge paralleling configurations up to 10,000 Adc.
- Field forcing levels up to 1,500 Vdc.
- High initial response per IEEE 421.2.
- Patented rectifier bridge active temperature balance algorithm.
- Optional integrated dual input power system stabilizer (PSS) IEEE type 2.
- Negative field forcing for best system performance.
- High-side voltage regulation mode.
- Multiple protection and limiting functions with online and offline settings.
- Built-in exciter/main field ground protection (64F).
- Interactive Display Panel (IDP-1201) for local and/or remote monitoring and control.
- BESTCOMS™*Pro*: an extremely flexible software configuration program for setup and testing.
- Real time monitoring of up to six parameters.
- Sequence of events recording.
- Simulation mode for configuration and testing.
- Optional automatic synchronizer with speed control.
- Automatic tuning feature calculates preliminary gain settings.

Benefits

- A wide variety of redundancy options increases system reliability.
- An available suite of limiters coordinates with protective functions to help maintain safe operating parameters and avoid system downtime.
- Various protection functions are integrated into the controller to avoid system damage.
- Dual gain settings can maximize excitation system performance based on load conditions.
- Improve system reliability and stability by coordinating dual settings groups for limiters and protection to match generation system conditions.
- A soft start feature maintains generator voltage control during system startup to prevent undesired overshoots.
- Time synchronizing provisions facilitate event analysis with a common chronological reference to aid in coordination efforts when comparing oscillography files from other devices.
- Real time monitoring and built-in test provisions simplify system testing and reduce commissioning time.

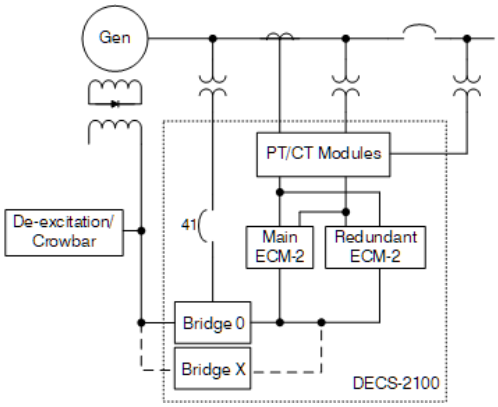

Figure 1 - DECS-2100 One-Line Diagram for Dual Channel Control Scheme

DECS-2100 Digital Excitation Control System

Specifications

Excitation Current
Up to 10,000 Adc in various configuration schemes.

Power Drawer Ratings (3-phase)
Input: 1,300 Vac
Forcing: 1,500 Vdc
Power Redundancy: N+1, 2, 3... configuration

Rectifier Bridge
Positive Forcing Only Option: Three SCRs
Positive/Negative Forcing: Six SCRs
Redundancy Option: Dual rectifier bridges

Power System Stabilizer (Optional)
Type: IEEE PSS2A/2B/2C
Preposition: Dual set points
Gains: Dual settings
Ramp Tracking Filter: One or two high-pass stages

Digital I/O Module (DIOM-2)
Digital Inputs: 24 per module
Sensing Range: ±24 to 125 Vdc, or 120 Vac
Digital Outputs: 16 per module
Type: Form C
Rating: 10 A at 120 Vac or 30 Vdc

Analog I/O Module (AIOM-2)
Analog Inputs: 4 per module
Sensing Range: ±10 Vdc
Resistance Temperature Device (RTD) Inputs: 1 per module
Type: 100 Ω platinum
Analog Outputs: 8 per module
Voltage Configuration: ±10 Vdc
Current Configuration: 4 to 20 mAdc

Control Channel
Single, Redundant, or Redundant and supervisory

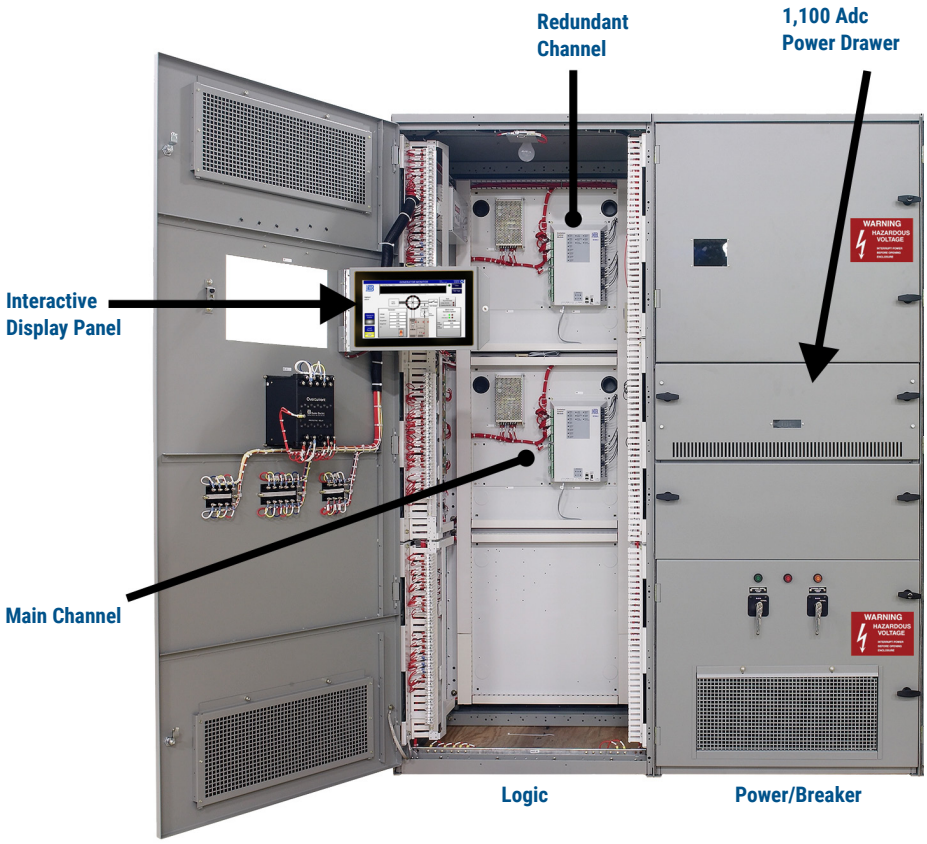

Figure 2 - Typical Dual Channel DECS-2100

Custom Solutions

The specifications listed above are for a typical application, however, DECS-2100 Digital Excitation Control Systems are extremely versatile. Contact Basler Electric to begin designing a DECS-2100 excitation system to meet the requirements of your specific application.

Related Products

BE1-FLEX Protection, Automation and Control System
Designed to be configurable for nearly any Power System Application.

DECS-250 Digital Excitation Control System
Provides precise voltage, var and Power Factor regulation, exceptional system response, and generator protection.

DECS-250N Digital Excitation Control System with Negative Forcing
Provides the same functionality as the DECS-250 with negative field forcing capabilities.

DECS-450 Digital Excitation Control System
A versatile digital excitation control system for synchronous generators and motors.

SMC-250 Synchronous Motor Controller
Combines the DECS-250 Digital Excitation Control System and the BE1-11m Motor Protection System as a complete unit for easy installation.

Large Power Transformers
Basler offers custom dry-type designs in a variety of UL-approved insulation systems through 2,500 kVA (convection cooled) or 2,800 kVA (forced-air cooled).

SGC-250 Synchronous Generator Controller
A prepackaged solution for applications requiring single or dual DECS-250 Digital Excitation Control Systems.

SGC-250N Synchronous Generator Controller with Negative Forcing
A prepackaged solution for applications requiring single or dual DECS-250N Digital Excitation Control Systems.

Accessories

Remote IDP-1201 Interactive Display Panel
A 12.1 inch (307 mm) diagonal Human Machine Interface (HMI) capable of displaying generator system parameters locally and remotely.

Basler Electric®

Highland, Illinois USA
Tel +1 618.654.2341
Fax +1 618.654.2351
email: info@basler.com

Suzhou, P.R.China
Tel +86.512.8227.2888
Fax +86.512.8227.2887
e-mail: chinainfo@basler.com