DECS-250

Digital Excitation Control System

Instruction Manual

12570 Route 143 • Highland, Illinois 62249-1074 USA
Tel +1 618.654.2341 • Fax +1 618.654.2351
www.basler.com • info@basler.com

Publication
9440300995 Rev G
October 2026

⚠ **WARNING:** California's Proposition 65 requires special warnings for products that may contain chemicals known to the state of California to cause cancer, birth defects or other reproductive harm. Please note that by posting this Proposition 65 warning, we are notifying you that one or more of the Proposition 65 listed chemicals may be present in products we sell to you. For more information about the specific chemicals found in this product, please visit https://www.basler.com/Prop65.

⚠ **AVERTISSEMENT :** La Proposition 65 de la Californie exige des avertissements spéciaux pour les produits pouvant contenir des substances chimiques reconnues par l'État de Californie comme pouvant causer le cancer, des malformations congénitales ou d'autres problèmes de reproduction. Veuillez noter qu'en publiant cet avertissement de la Proposition 65, nous vous avisons que les produits que nous vous vendons peuvent contenir une ou plusieurs des substances chimiques répertoriées dans la Proposition 65. Pour plus d'informations sur les substances chimiques spécifiques contenues dans ce produit, veuillez consulter https://www.basler.com/Prop65.

Preface

This instruction manual provides information about the installation and operation of the DECS-250. To accomplish this, the following information is provided:

- Installation
- Configuration
- Startup
- Operation
- Software interface
- Troubleshooting
- Specifications

Conventions Used in this Manual

Important safety and procedural information is emphasized and presented in this manual through warning, caution, and note boxes. Each type is illustrated and defined as follows.

Warning! **Avertissement!**
Warning boxes call attention to conditions or actions that may cause personal injury or death. Les encadrés d'avertissement attirent l'attention sur des conditions ou des actions susceptibles d'entraîner des blessures ou la mort.

Caution **Mise en garde**
Caution boxes call attention to operating conditions that may lead to equipment or property damage. Les encadrés de mise en garde attirent l'attention sur les conditions de fonctionnement susceptibles d'entraîner des dommages matériels ou matériels.

Note
Note boxes emphasize important information pertaining to installation or operation.

Basler Electric
12570 State Route 143
Highland IL 62249-1074 USA
www.basler.com
info@basler.com
Tel: +1 618.654.2341
Fax: +1 618.654.2351

© 2026 by Basler Electric
All rights reserved
First printing: October 2022

Warning!

Avertissement!

READ THIS MANUAL. Read this manual before installing, operating, or maintaining this equipment. Note all warnings, cautions, and notes in this manual as well as on the product. Keep this manual with the product for reference. Only qualified personnel should install, operate, or service this system. Failure to follow warning and cautionary labels may result in personal injury or property damage. Exercise caution at all times.

LISEZ CE MANUEL. Lisez ce manuel avant d'installer, d'utiliser ou d'entretenir cet équipement. Notez tous les avertissements, mises en garde et remarques dans ce manuel ainsi que sur le produit. Conservez ce manuel avec le produit pour référence. Seul un personnel qualifié doit installer, utiliser ou entretenir ce système. Le non-respect des étiquettes d'avertissement et de mise en garde peut entraîner des blessures ou des dommages matériels. Faites preuve de prudence à tout moment.

Basler Electric does not assume any responsibility to compliance or noncompliance with national code, local code, or any other applicable code. This manual serves as reference material that must be well understood prior to installation, operation, or maintenance.

For terms of service relating to this product and software, see the *Commercial Terms of Products and Services* document available at www.basler.com/customer-terms-and-conditions.

This publication contains confidential information of Basler Electric Company, an Illinois corporation. It is loaned for confidential use, subject to return on request, and with the mutual understanding that it will not be used in any manner detrimental to the interests of Basler Electric Company and used strictly for the purpose intended.

It is not the intention of this manual to cover all details and variations in equipment, nor does this manual provide data for every possible contingency regarding installation or operation. The availability and design of all features and options are subject to modification without notice. Over time, improvements and revisions may be made to this publication. Before performing any of the following procedures, contact Basler Electric for the latest revision of this manual.

At the end of its life, this equipment should not be disposed of with general municipal waste. Instead, it should be recycled in a responsible manner that protects human health and the environment.

Rockwell Automation, Rockwell Software, ControlLogix, Logix5000, and RSLogix are trademarks of Rockwell Automation, Inc.

ControlNet is a registered trademark of ODVA, Inc.

The English-language version of this manual serves as the only approved manual version.

Revision History

A historical summary of the changes made to this instruction manual is provided below. Revisions are listed in reverse chronological order.

Visit www.basler.com to download the latest hardware, firmware, and software revision histories.

Instruction Manual Revision History

Manual Revision and Date	Change
G, Oct 2026	• Removed references to cable shield connections • Updated overexcitation limiter description for consistency across manuals • Other minor edits
F, Apr 2025	• Updated connections in Figure 2-8, *Typical Dual-Bus Voltage Sensing* • Updated China RoHS table • Other minor edits
E, Dec 2023	• Added China RoHS compliance • Minor text edits
D, Feb 2023	• Removed the “T4” T-code rating from the ATEX and IECEx certification
C, Jan 2023	• Updated the UL file number for hazardous location certification in Europe
B, Dec 2022	• Added the maximum voltage rating for the generator current sensing inputs • Corrected and amended the certifications and information for product installation in hazardous locations • Added the part number for a replacement connector kit used for the product terminal connectors
A, Nov 2022	• Added product image to manual cover page • Adjusted Figure 2-10 to better illustrate DECS-250 internal elements • Corrected wording for external resistor connections in Chapter 3, *Operation* • In Chapter 8, *Specifications*, *Parallel Compensation*, added *Cross-Current Compensation* material
–, Oct 2022	• Initial release

Contents

General Information 1-1
Installation 2-1
Operation 3-1
Configuration 4-1
Startup 5-1
Software Interface 6-1
Troubleshooting 7-1
Specifications 8-1
Time Overcurrent Curves 9-1
ControlNet® Application Objects 10-1
Tag Description 11-1

1 • General Information

Introduction

This instruction manual covers versions of the DECS-250 Digital Excitation Control System. These systems are functional replacements for the Rockwell Automation® Combination Generator Control Module (CGCM) and Basler BECGCM. These versions of the DECS-250 have one of the following style numbers:

- LN2SA1C
- LN2SA1D

A DECS-250 with style number LN2SA1C communicates using the ControlNet protocol and a DECS-250 with style number LN2SA1D communicates using the Ethernet/IP DLR (device level ring) protocol. These style numbers are further defined in the style chart of Figure. 1-1.

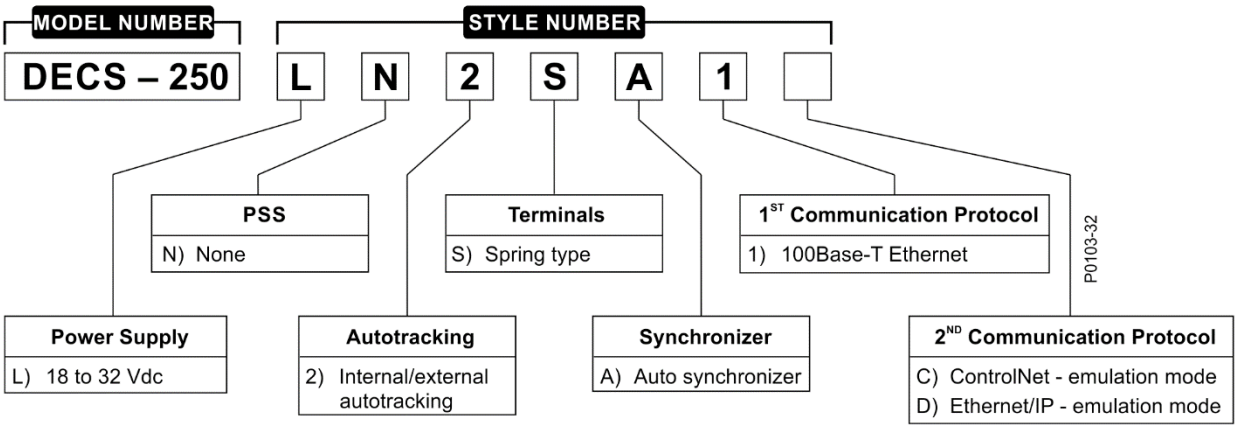

Figure 1-1. DECS-250 Style Chart

The DECS-250 offers precise excitation control and generator protection to provide comprehensive generator power management. System parameters, regulation settings, and protection functions are programmed through Rockwell Automation® RSLogix™ 5000 software.

Regulation and Control Functions

DECS-250 regulation and control functions include:

- Excitation control modes:
  - Automatic voltage regulation (AVR)
  - Manual or field current regulation (FCR)
  - Power factor regulation (PF)
  - Reactive power regulation (var)
- Soft start buildup with an adjustable ramp in AVR and FCR control modes
- Overexcitation (OEL) and underexcitation (UEL) limiting in AVR, var, and PF control modes
- Underfrequency compensation (Volts/Hertz)
- Line Drop Compensation
- Autotracking between operating modes and between DECS-250 units
- Automatic transfer to a backup DECS-250 unit in redundant systems
- Generator paralleling with reactive droop compensation or cross-current (reactive differential) compensation
- Generator paralleling with real power load sharing
- Synchronizing for one or two circuit breakers
- Compliant with Caterpillar 3L 0485 specification
- Flash memory

Protection Functions

DECS-250 protection functions include:

- Loss of excitation current (40)
- Overexcitation voltage (59F)
- Generator overvoltage (59)
- Generator undervoltage (27)
- Loss of sensing (60FL)
- Loss of permanent magnet generator (PMG/operating power) (27)
- Reverse var (40Q)
- Overfrequency (81O)
- Underfrequency (81U)
- Reverse power (32R)
- Exciter diode monitor
- Phase rotation error (47)
- Generator overcurrent (51)

Metering Functions

DECS-250 metering functions include:

- Voltage
- Current
- Frequency
- Real power, apparent power, and reactive power
- Power factor
- Real energy (kWh), apparent energy (kVAh), and reactive energy (kvarh)
- Controller excitation current and voltage
- Diode monitor ripple level
- Load share error
- Synchronization parameters

Inputs

DECS-250 inputs include:

- Single-phase or three-phase true rms generator voltage sensing
- Single-phase dual bus or three-phase single bus rms bus voltage sensing
- Three-phase generator current sensing (1 or 5 ampere nominal)
- Single-phase cross current loop 1- or 5-ampere CT input with shorting contact
- Analog ±10 Vdc input provides proportional, remote control of the setpoints
- DC power input

Outputs

DECS-250 outputs include:

- Pulse-width modulated output power stage rated at 15 Adc
- Fault relay and redundancy relay output contacts
- Load sharing connection for use with Allen Bradley 1402-LSM Line Sync Module or compatible hardware

Communications Interfaces

DECS-250 communication interfaces include:

- Redundant ControlNet connectors or redundant Ethernet/IP DLR connectors

- RS-232 port for dedicated communication with a redundant DECS-250
- USB port for factory configuration and test (not for customer use)

2 • Installation

Receipt and Storage

Upon receipt of a DECS-250, check the part number against the requisition and packing list for agreement. Inspect for damage. If damage is evident, report it to the freight carrier and Basler Electric.

If a DECS-250 will not be installed immediately, store it in the original shipping package in a moisture- and dust-free environment.

Mounting

The DECS-250 is intended for use in a Pollution Degree 2 Industrial Environment, in Overvoltage Category II applications (as defined by IEC publication 60664-1).

Warning!

Avertissement!

Explosion Hazard

- Substitution of components may impair suitability for Class I, Division 2
- Do not replace components or disconnect equipment unless power has been switched off or the area is known to be nonhazardous
- The device is not suitable for field installation for ATEX and IECEx. This product must be installed in an enclosure. All cables connected to the product must remain in the enclosure or be protected by conduit or other means.
- All wiring must comply with NEC article 501-4(b)

Risque d'explosion

- La substitution de composants peut nuire à l'aptitude à la classe I, division 2
- Ne remplacez pas les composants ou ne débranchez pas l'équipement à moins que l'alimentation n'ait été coupée ou que la zone ne soit connue comme étant non dangereuse
- L'appareil n'est pas adapté à une installation sur site pour ATEX et IECEx. Ce produit doit être installé dans une enceinte. Tous les câbles connectés au produit doivent rester dans le boîtier ou être protégés par un conduit ou tout autre moyen.
- Tout le câblage doit être conforme à l'article 501-4(b) du NEC

The DECS-250 must be mounted vertically. Any other mounting orientation will reduce the heat dissipation ability of the heat sink and possibly lead to premature failure of the DECS-250. Mount the DECS-250 anywhere that the ambient temperature and humidity do not exceed the rated environmental conditions or clearance requirements. Clearance requirements for the DECS-250 are:

- 63.5 millimeters (2.5 inches) on the left and right sides of DECS-250, when mounted
- 101.6 millimeters (4 inches) above and below the DECS-250, when mounted

DECS-250 mounting dimensions are shown in Figure 2-1.

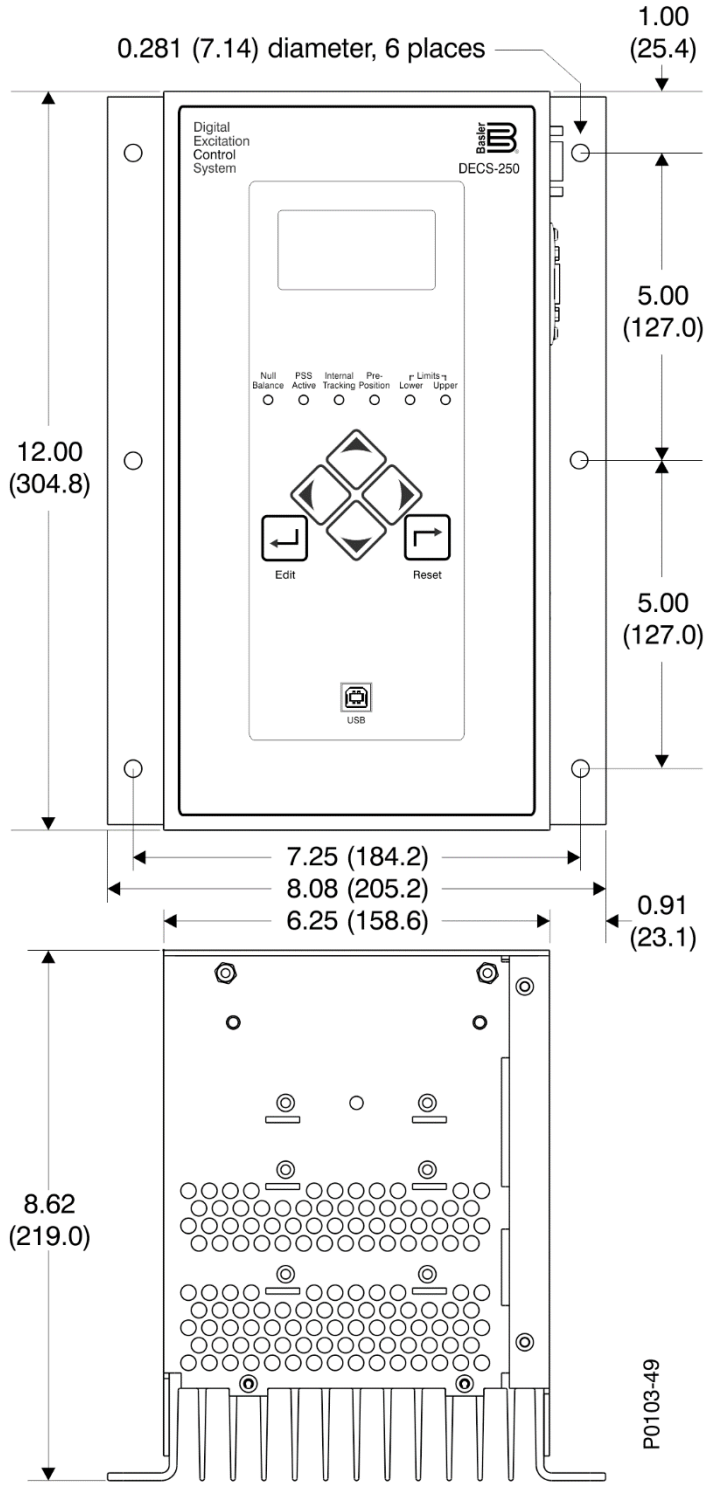

Note: All dimensions are in inches (millimeters).

Figure 2-1. DECS-250 Mounting Dimensions

Retrofit Installations

An adaptor plate kit is available to simplify replacement of a CGCM or BECGCM with the DECS-250. This kit enables DECS-250 mounting using the existing CGCM/BECGCM panel mounting holes. Request Basler part number 9440311102.

Connections

DECS-250 connections are dependent on the application and excitation scheme. A given installation will not use all DECS-250 inputs and outputs. Incorrect wiring can result in damage to the DECS-250.

Connect the DECS-250 terminals with copper wire rated for a minimum of 600 volts. All wire must be copper. General appliance wire rated for a minimum temperature of 105°C (221°F) is acceptable. Select circuit conductors based on good design practice.

Terminals and Connectors

DECS-250 terminals are located on the left panel and DECS-250 connectors are located on the front and right panels. The USB port on the front panel and the Ethernet port on the right panel are used only for factory testing and are disabled prior to shipment.

Note
Be sure the DECS-250 is hard-wired to earth ground with no smaller than 3.3 mm^2 (12 AWG) copper wire connected to terminal 56 (GND). When the DECS-250 is connected in a system with other devices, use a separate lead to the ground bus from each device.

Terminals

DECS-250 terminals consist of single-row, multiple-pin headers that mate with removable connectors wired by the user. These terminal connectors secure each wire with a spring-loaded contact. The connectors and headers are uniquely keyed to ensure that a connector mates only with the correct header.

A replacement connector kit is available from Basler Electric. Request Basler part number 9440317100.

Figure 2-2 illustrates the DECS-250 terminals and Table 2-1 lists the DECS-250 terminal assignments and suitable wire gauge sizes.

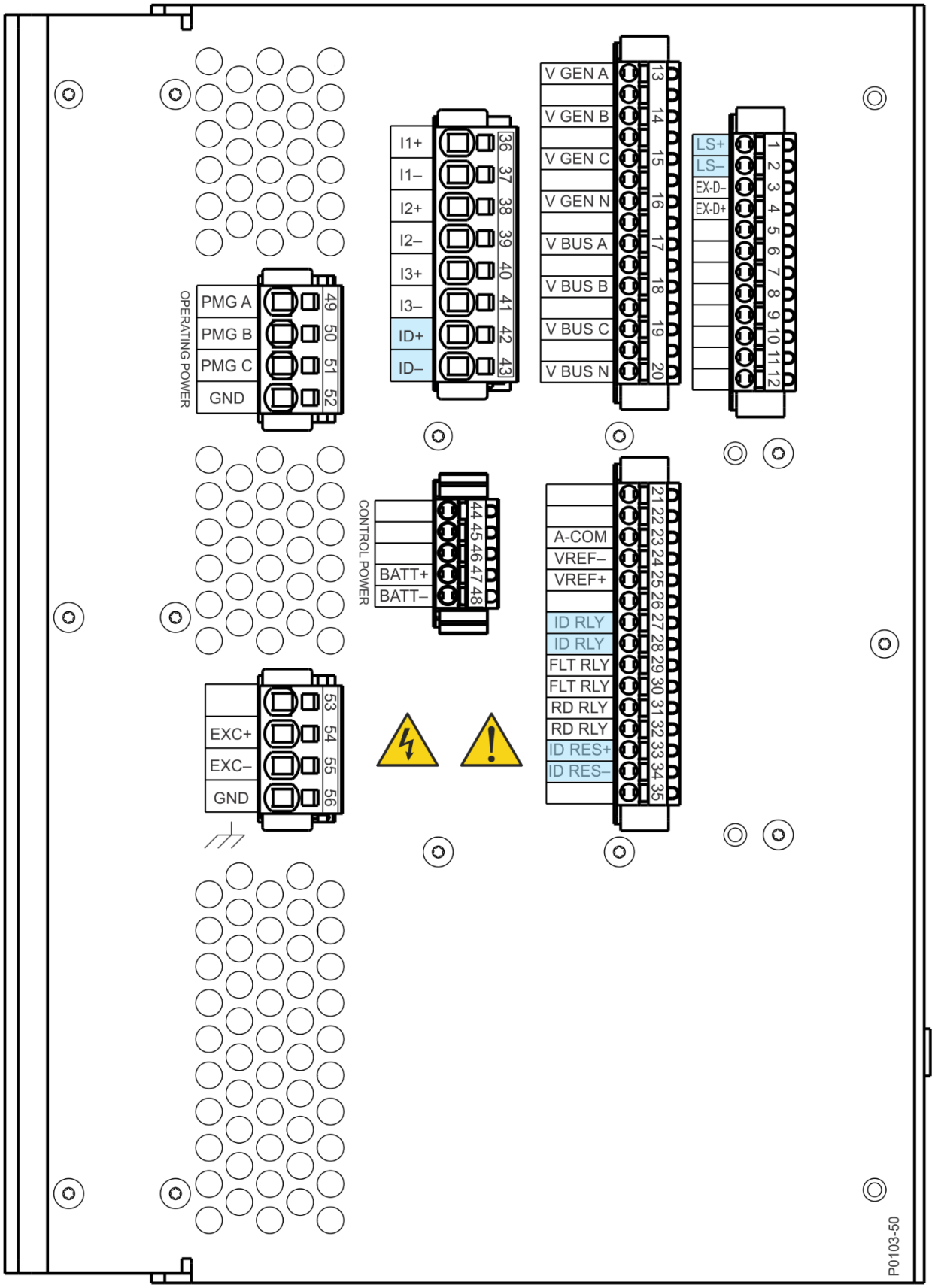

Figure 2-2. Left-Side Panel Terminals

Table 2-1. Terminal Descriptions

Terminal Number	Terminal Label	Description	Wire Size Range
1	LS+	Load sharing input	0.2 – 2.5 mm^2 24 – 12 AWG
2	LS–	Load sharing return	
3	EX-D–	Excitation enable input return	
4	EX-D+	Excitation enable input	
5 – 12		Terminals not used	
13	V GEN A	A-phase generator sensing voltage input	
14	V GEN B	B-phase generator sensing voltage input	
15	V GEN C	C-phase generator sensing voltage input	
16	V GEN N	Neutral generator sensing voltage input	
17	V BUS A	A-phase bus sensing voltage input	
18	V BUS B	B-phase bus sensing voltage input	
19	V BUS C	C-phase bus sensing voltage input	
20	V BUS N	Neutral bus sensing voltage input	
21 – 22		Terminals not used	
23	A-COM	Analog common	
24	VREF–	Remote setpoint adjust input return	
25	VREF+	Remote setpoint adjust input	
26		Terminal not used	
27, 28	ID RLY	Cross-current relay output	
29, 30	FLT RLY	Fault relay output	
31, 31	RD RLY	Redundancy relay output	
33	ID RES+	Cross-current resistor positive connection	
34	ID RES–	Cross-current resistor negative connection	
35		Terminal not used	
36	I1+	A-phase (+) sensing current input	0.2 – 6 mm^2 24 – 8 AWG
37	I1–	A-phase (–) sensing current input	
38	I2+	B-phase (+) sensing current input	
39	I2–	B-phase (–) sensing current input	
40	I3+	C-phase (+) sensing current input	
41	I3–	C-phase (–) sensing current input	
42	ID+	Cross-current compensation (+) current input	
43	ID–	Cross-current compensation (–) current input	
44 – 46		Terminals not used	
47	BAT+	+18 to 32 Vdc control power input	0.2 – 2.5 mm^2 24 – 12 AWG
48	BAT–	–18 to 32 Vdc control power input	
49	PMG A	A-phase operating power input	0.2 – 6 mm^2 24 – 8 AWG
50	PMG B	B-phase operating power input	
51	PMG C	C-phase operating power input	
52	GND	Operating power input ground connection	
53		Terminal not used	
54	EXC+	Excitation (+) output	
55	EXC–	Excitation (–) output	
56	GND	Chassis ground	

Connectors

DECS-250 connectors are located on the right side panel and include two factory test ports, a redundancy port, and a network communication port.

Factory Test Ports

The front-panel USB jack and the RJ45 jack on the right panel serve as factory test and calibration ports. These ports are disabled at the time of shipment.

Redundancy Port

A female DB-9 (RS-232) connector is located on the right panel and is used for communication with a partner DECS-250 in a redundant system. This redundancy enables the backup unit to automatically track the setpoint of the primary unit. Use a null modem/crossover serial cable for this connection (Basler part number 9310300032). Table 2-2 lists the redundancy port connector pin assignments and functions. Cable connections are illustrated in Figure 2-3.

Table 2-2. Redundancy Cable Pin Assignments

Pin	Name	Function
1		Not used
2	XMIT	Data transmit
3	RCV	Data receive
4	DTR	Data terminal ready
5	GND	Ground connection
6	DSR	Data set ready
7, 8, 9		Not used

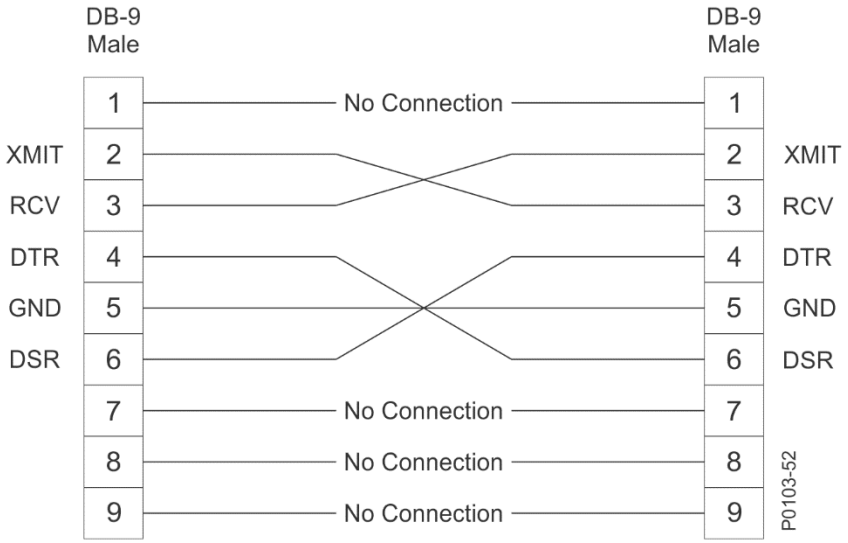

Figure 2-3. Redundancy Port Cable Wiring

Network Communication Port

The network communication port is located on the right panel and communicates with an Allen-Bradley Logix PLC. Its hardware type depends upon the style number of the DECS-250.

A DECS-250 with a style number of LN2SA1C has a ControlNet 1.5 interface that accepts two BNC connectors. If redundancy is desired, use both connectors. Otherwise, either connector can be used. Use the front panel HMI to set the ControlNet network node address (MAC ID).

A DECS-250 with a style number of LN2SA1D has an Ethernet/IP Device Level Ring (DLR) interface with dual RJ45 network interface jacks.

Control Power

DECS-250 control power is applied at terminals BAT+ (47) and BAT– (48). A nominal control power voltage of 24 Vdc is acceptable.

Operating Power

Three-phase operating power is applied to DECS-250 terminals PMG A (49), PMG B (50), and PMG C (51). A single-phase operating power source is applied to DECS-250 terminals PMG A (49) and PMG C (51). These terminals are used whether the operating power source is a PMG or the generator output (shunt excited). In a shunt-excited application, DECS-250 operating power should be applied through a voltage transformer (VT). Typical operating power connections are illustrated in FIG. Twisted, shielded wiring is required for operating power; terminal GND (52) serves as a connection for the cable shield.

Excitation Output

The excitation output terminals are labeled EXC+ (54) and EXC– (55). Twisted, shielded cabling is required for the excitation output wiring. Terminal GND (52) serves as a ground connection for the cable shield.

In an application with redundant DECS-250 controllers, three or four external fly-back diodes must be placed across the generator field winding.

Chassis Ground

A chassis ground connection is provided at DECS-250 terminal GND (56). Connect this terminal to earth ground with no smaller than 3.3 mm2 (12 AWG) copper wire. When the DECS-250 is configured in a system with other devices, a separate lead should be connected from the ground bus to each device.

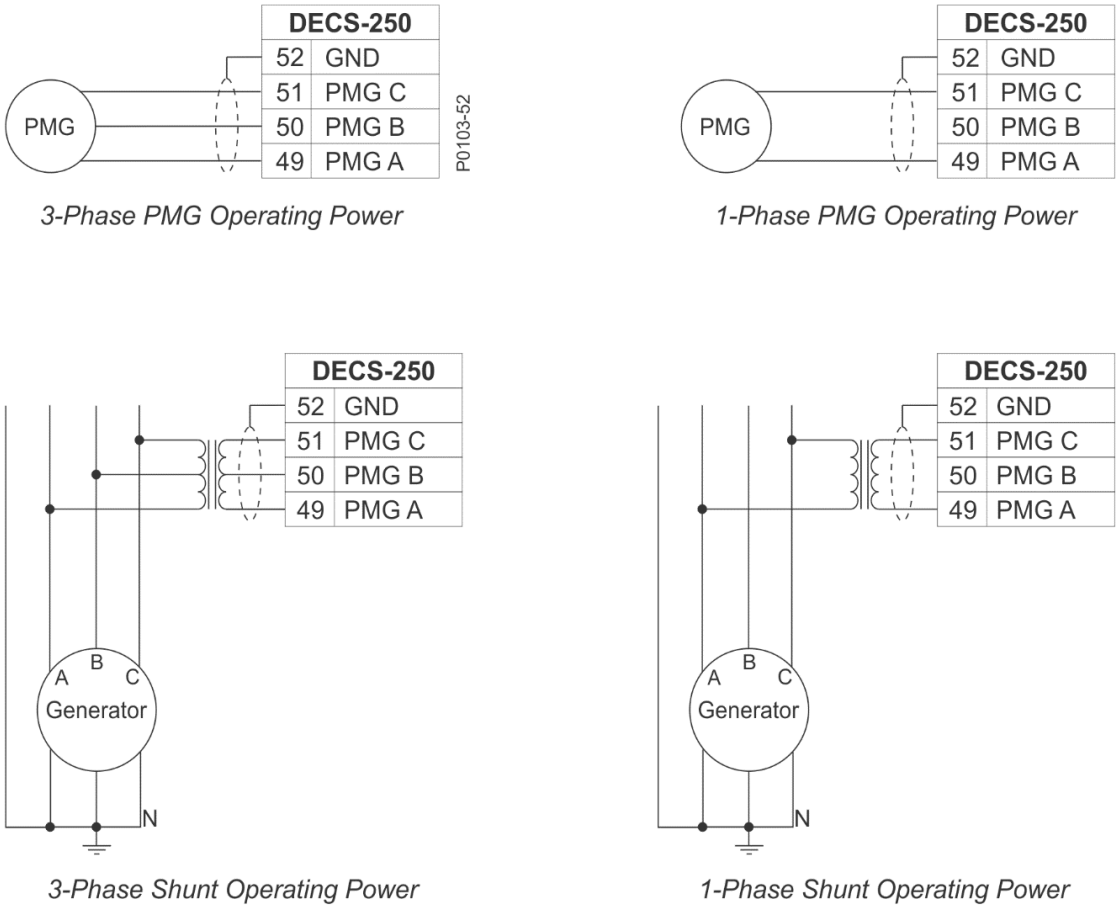

Figure 2-4. Typical Operating Power Connections

Voltage and Current Sensing

The DECS-250 senses generator voltage, bus voltage, and generator current.

Generator and Bus Voltage Sensing

The DECS-250 accepts single-phase or three-phase generator and bus sensing voltage. These inputs accept nominal voltages of 120 Vac or 208 Vac. Generator voltage sensing terminals are labeled V GEN A (13), V GEN B (14), V GEN C (15), and V GEN N (16). Bus voltage sensing terminals are labeled V BUS A (17), V BUS B (18), V BUS C (19), and VBUS N (20).

Generator and bus voltage sensing connection schemes supported by the DECS-250 include single-phase, delta or two-transformer open delta, three-wire wye, and four-wire wye. Dual-breaker, single-phase bus sensing is also supported. Typical single-phase voltage sensing connections are shown in Figure 2-5, delta voltage sensing connections are shown in Figure 2-6, typical wye voltage sensing connections are shown in Figure 2-7, and typical dual-breaker bus voltage sensing connections are shown in Figure 2-8.

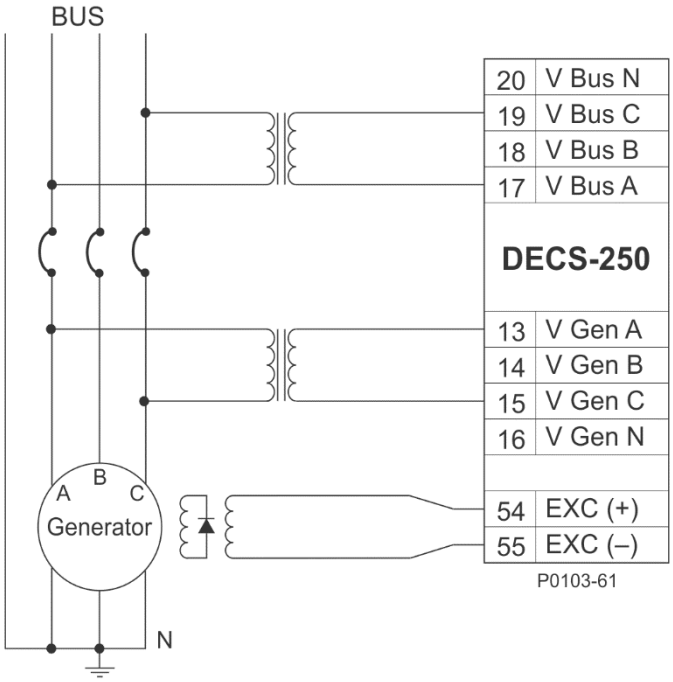

Figure 2-5. Typical Single-Phase Bus and Generator Voltage Sensing Connections

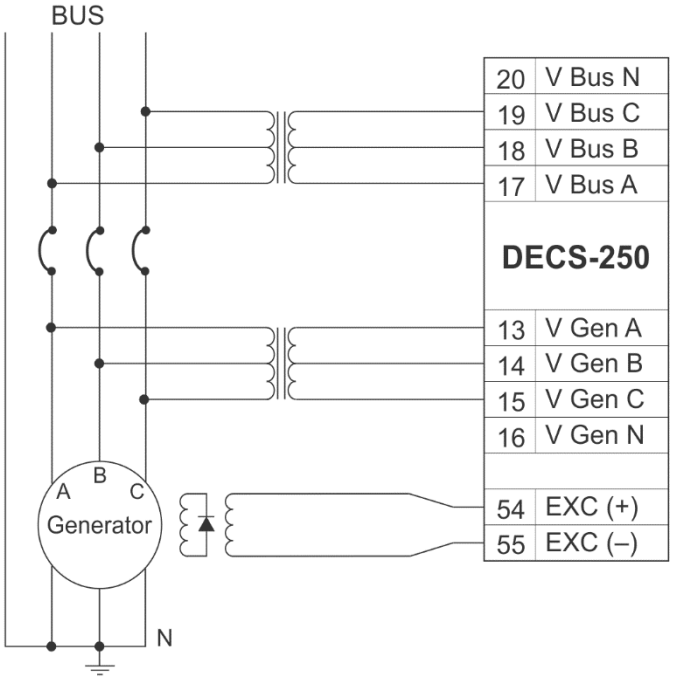

Delta Bus and Delta Generator Voltage Sensing Connections

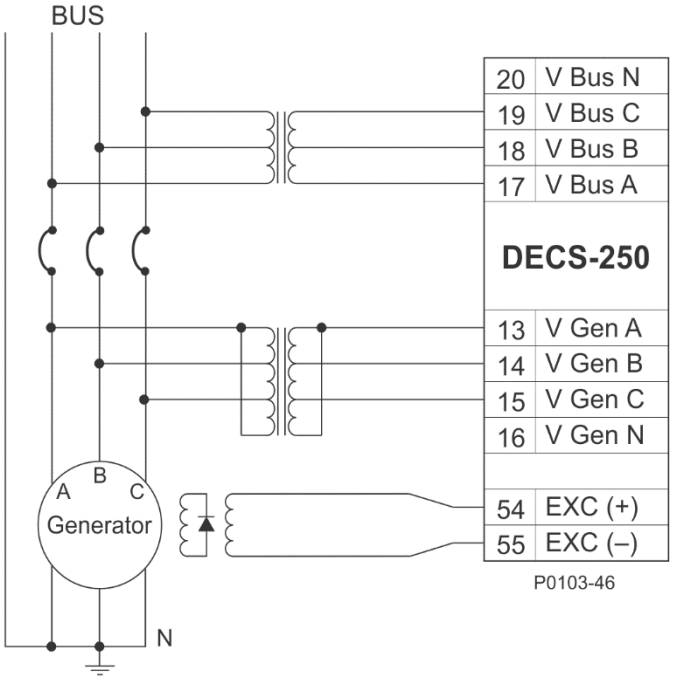

Delta Bus and Closed-Delta Generator Voltage Sensing Connections

Figure 2-6. Typical Delta Bus and Generator Voltage Sensing Connections

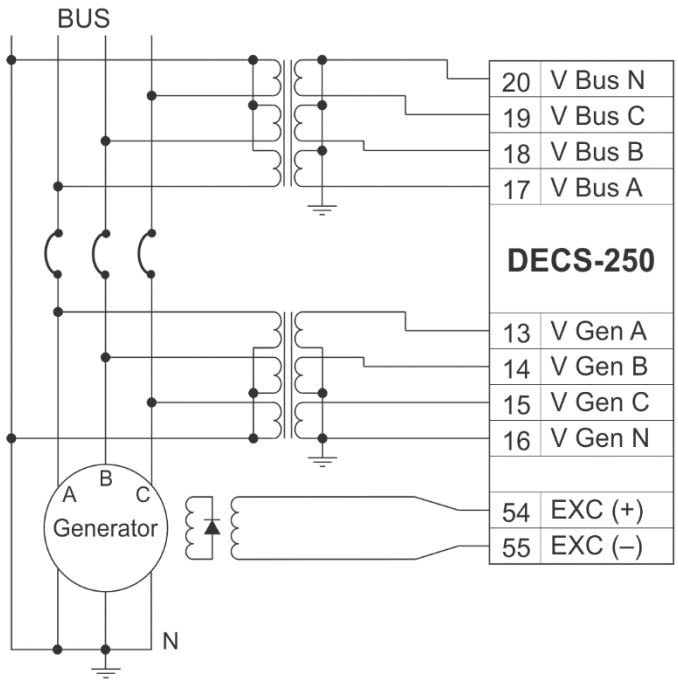

Grounded-Wye Bus and Grounded-Wye Generator Voltage Sensing Connections

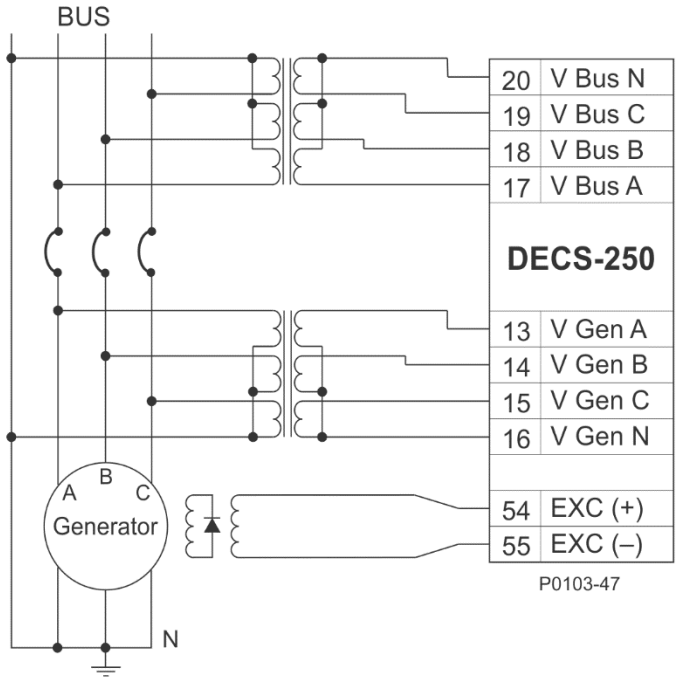

Wye Bus and Wye Generator Voltage Sensing Connections

Figure 2-7. Typical Wye Bus and Generator Voltage Sensing Connections

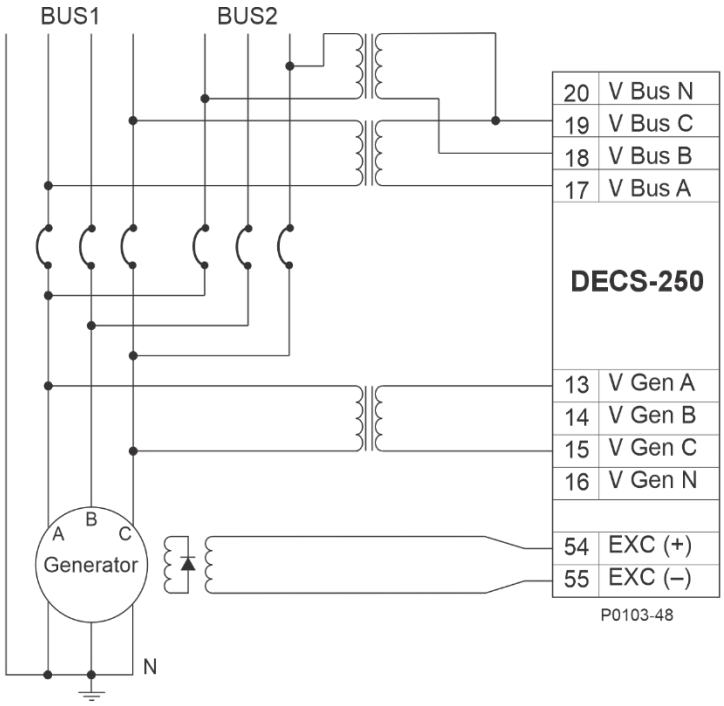

Figure 2-8. Typical Dual-Bus Voltage Sensing Connections

Generator Current Sensing

Generator current sensing is supplied to the DECS-250 from external current sensing transformers (CTs) with a nominal rating of 1 Aac or 5 Aac. Inputs for three-phase current sensing are provided at terminals I1+ (36) and I1– (37), I2+ (38) and I2– (39), and I3+ (40) and I3– (41). Typical generator current sensing connections are illustrated in Figure 2-9.

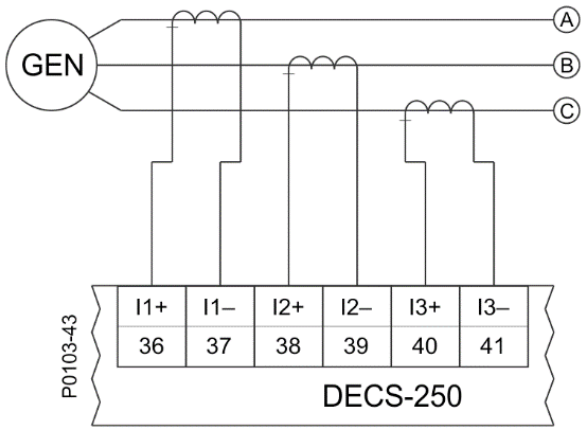

NOTES
1. If only one CT is used, connect it to the B-phase.
2. Three-phase current sensing is required for PSS applications.

Figure 2-9. Typical Generator Current Sensing Connections

Cross-Current Compensation

A current sensing input for cross-current (reactive differential) compensation is provided at terminals ID+ (42) and ID– (43). Figure 2-10 illustrates typical current sensing connections for two paralleled generators.

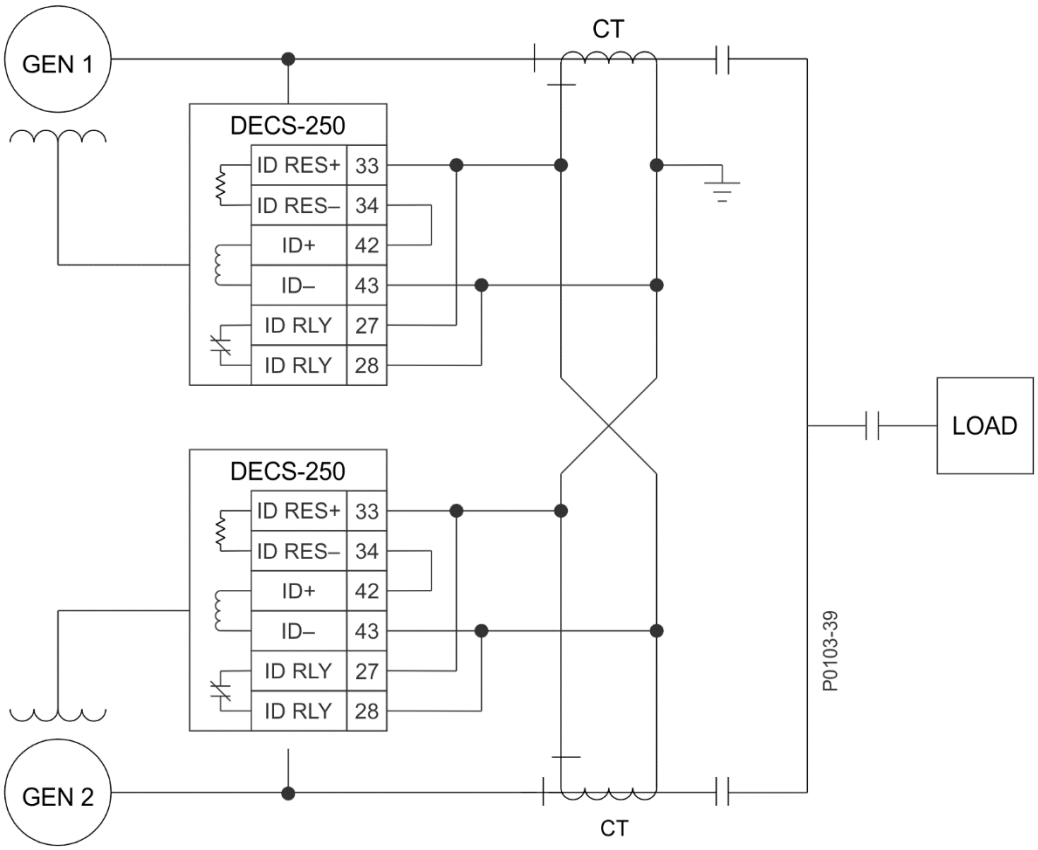

Figure 2-10. Typical Cross-Current Compensation Sensing Connections

The resistance of the cross-current CT wiring must be as low as possible. A loop resistance less than 10% of the internal cross-current burden resistance of 1.0 Ω enables cross-current operation with negligible voltage droop. If the cross-current CT loop resistance must be higher, adjust the gain or increase the cross-current burden resistance. This is accomplished by adding external resistance in series with DECS-250 terminals ID RES+ (33) and ID RES– (34).

Auxiliary Input

Remote control of the DECS-250 setpoint is provided through the ±10 Vdc auxiliary input. Auxiliary input terminals are labeled VREF– (24) and VREF+ (25). Twisted, shielded wiring is required for the auxiliary input connections. Terminals A-COM (23) serves as a connection for the cable shield.

Remote Excitation Enable Input

This input accepts a 24 Vdc input at terminals EX-D+ (3) AND EX-D– (4).

Real-Power Load Sharing Connections

The load sharing terminals enable two or more DECS-250 controllers to load the generators under their control so that the same per unit output is developed by each generator. These terminals are labeled LS+ (1) and LS– (2). In a load sharing application, the LS+ terminals of all DECS-250 controllers are connected together and the LS– terminals of all DECS-250 controllers are connected together. Twisted, shielded cabling is required for the load sharing connections.

Relay Outputs

DECS-250 relay outputs consist of fault relay contacts, redundancy relay contacts, and cross-current relay contacts. All relay outputs have normally-open contacts.

Fault Relay Output

Fault relay connections are made at two terminals labeled FLT RLY (29 and 30).

Redundancy Relay Output

Redundancy relay output connections are made at two terminals labeled RD RLY (31 and 32). Typical redundancy relay connections are illustrated in Figure 2-11.

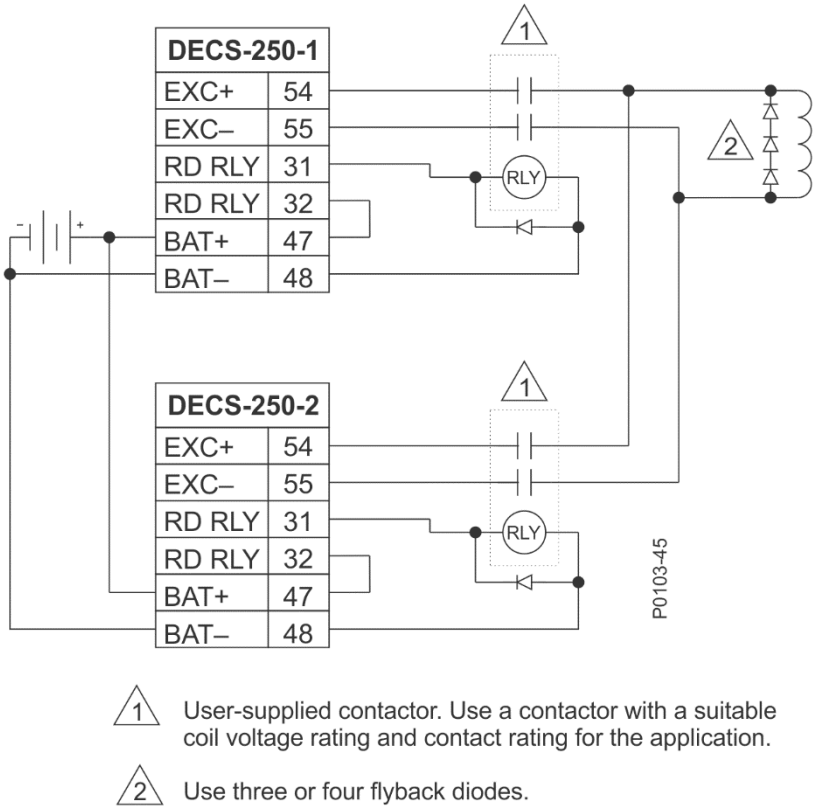

Figure 2-11. Typical Redundancy Relay Connections

Cross-Current Relay Output

The ID RLY output contacts at terminals 27 and 28 close and provide a short-circuit across the CCCT input when the cross-current compensation (reactive differential) function is not active.

Retrofit Installations

For applications where a CGCM or BECGCM is being replaced with a DECS-250, the differences in wiring and connections are minor. While all CGCM connections are made on the front panel, the majority of DECS-250 connections are made on the left-side panel. DECS-250 communication connections are made on the right-side panel. DECS-250 terminal labeling and function are identical to that of the CGCM with the following exceptions.

Generator Current Sensing

The CGCM and BECGCM used separate terminals for nominal generator current sensing values of 1 Aac and 5 Aac. The DECS-250 uses a single terminal for connection to a 1 Aac or 5 Aac nominal sensing CT.

Ground Connection

A threaded stud for connection to earth ground was provided on the CGCM and BECGCM. On the DECS-250, earth ground connections are provided on the PMG operating power terminal block and the excitation output terminal block.

Annunciation Outputs

The CGCM and BECGCM used open-collector annunciation outputs while the DECS-250 uses dry contact outputs.

Reactive Differential Resistor Input

The DECS-250 has additional terminals labeled ID RES+ and ID RES–. In a cross-current application where the cross-current CT loop resistance is lower than desired, external resistance can be added in series with these terminals to increase the cross-current burden resistance.

Hazardous Location Installations

Capacitance and inductance of the field wiring from the intrinsically safe equipment (the DECS-250) to the associated apparatus (for example, current transformers) must be calculated and must be included in the system calculations shown in Table 2-3. Cable capacitance, Ccable, plus intrinsically safe equipment capacitance, Ci, must be less than the marked capacitance, CA (or Co), shown on any associated apparatus used. The same applies for inductance (Lcable, Li and La, or Lo, respectively). Where the cable capacitance and inductance per foot are not known, the following values must be used:
Ccable = 60 pF/ft., Lcable = 0.2 uH/ft.

Table 2-3. Required Circuit Parameters for the Associated Apparatus

Nonincendive/Energy Limited (Intrinsically Safe) Equipment		Associated Apparatus
Vmax (or Ui)	≥	Voc or Vt (or Uo)
Imax (or Ii)	≥	Isc or It (or Io)
Pmax (or Pi)	≥	Po*
Ci = Ccable	≤	Ca (or Co)
Li + Lcable	≤	La (or Lo)

- If Po of the associated apparatus is not known, it is calculated by using the formula Po = (Voc × Isc) ÷ 4 = (Uo × I/O) ÷ 4.

The parameters used in Table 2-3 are defined as follows.

- Ca or Co: maximum capacitance that can be connected to the output terminals of the associated equipment
- Ccable: cable capacitance
- Ci: apparent capacitance at the specified terminals of the DECS-250
- Imax or Ii: maximum current that can be connected to the specified terminals of the DECS-250
- Isc, It, or I/O: maximum short-circuit current that can be present at the output terminals of the associated equipment
- La or Lo: maximum inductance that can be connected to the output terminals of the associated equipment
- Lcable: cable inductance
- Li: apparent inductance at the specified terminals of the DECS-250
- Pmax or Pi: maximum power that can be connected to the specified terminals
- Po: maximum output power from the output terminals of the associated equipment
- Vmax or Ui: maximum voltage that can be connected to the specified terminals of the intrinsically safe device (DECS-250)
- Voc, Vt, or Uo: maximum open-circuit voltage that can be present at the output terminals of the associated equipment

Field Wiring Terminals and Entity Parameters

Ratings for cross-current compensation and load sharing field wiring are shown in FIG.

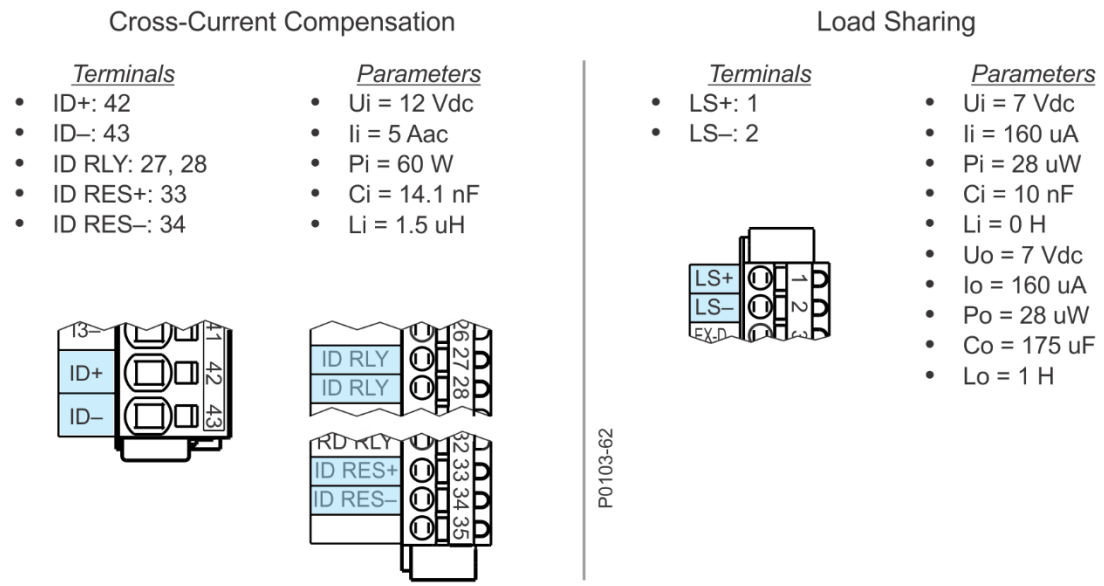

Figure 2-12. Class I, Division 2 Groups A, B, C, and D, Class I Zone 2 IIC Area – Connections and Parameters

Installation

Associated apparatus must be installed in accordance with the manufacturer control drawing and:

- Article 504 of the National Electrical Code (ANSI/NFPA 70) for installations in the United States,
- Section 18 of the Canadian Electrical Code for installations in Canada, or
- In accordance with the local installation codes.

Schedule of Limitations

- Mount this equipment in an enclosure with a minimum ingress protection rating of at least IP54 (as defined in EN/IEC 60079-0) and used in an environment of not more than Pollution Degree 2 (as defined in EN/IEC 60664-1) when applied in ATEX/IECEx Zone 2 environments.
- Mount this equipment in an enclosure with a minimum ingress protection rating of at least IP54 (as defined in UL/CSA 60079-0) and used in an environment of not more than Pollution Degree 2 (as defined in IEC 60664-1) when applied in USA/Canada Zone 2 environments.
- At an ambient temperature of 70°C, the device has a maximum temperature rise measurement of 46°C under normal operation.
- Transient protection limiting transient to 140% of rated voltage must be provided.
- Do not connect or disconnect components unless power has been switched off.

3 • Operation

The DECS-250 integrates with a Rockwell Automation® Logix PLC and RSLogix™ 5000 software to provide the generator regulation, synchronizing, and protection functions described in this chapter. DECS-250 functions are illustrated in Figure 3-1.

For information about configuring the DECS-250, see the *Configuration* chapter. For information about the software interface between the DECS-250 and its host Logix PLC, see the *Software Interface* chapter.

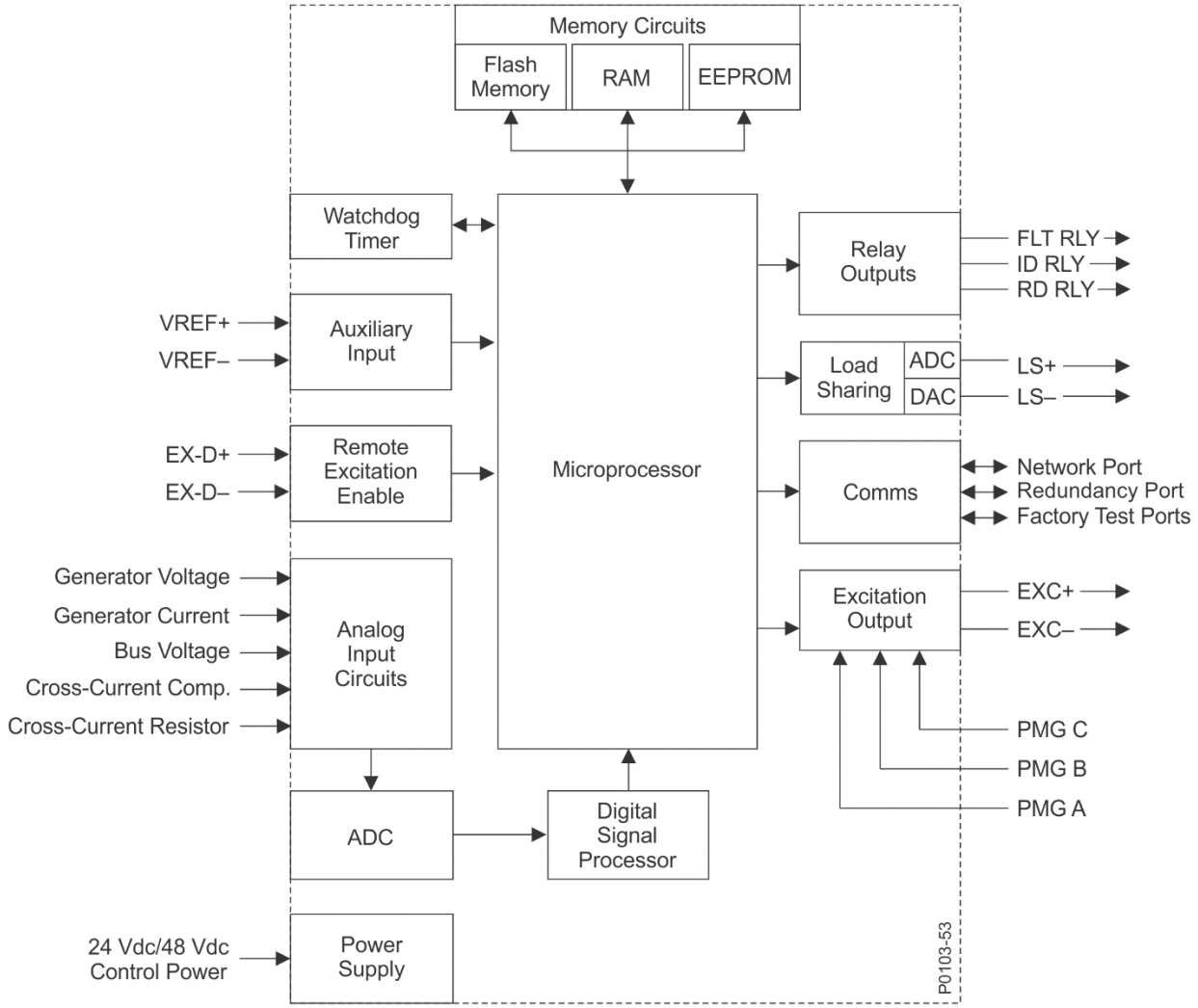

Figure 3-1. Function Block Diagram

Inputs and Outputs

DECS-250 inputs and outputs include power inputs, analog inputs, a remote excitation enable input, analog outputs, and contact outputs.

Power Inputs

The DECS-250 has two power inputs: a control power input and an operating power input.

Control Power

DECS-250 control power of 24 Vdc is applied at terminals BATT+ (47) and BATT– (48).

Operating Power

Operating power can be obtained from the generator output, utility mains, or a permanent magnet generator (PMG). When operating power is supplied by the generator or utility mains, DECS-250 operating power should be applied through a voltage transformer (VT).

The operating power input accepts a three-phase or single-phase voltage input. Three-phase operating power is applied at terminals PMG A (49), PMG B (50), and PMG C (51). Single-phase operating power is applied at terminals PMG-A (49) and PMG C (51). Typical operating power connections are illustrated in the *Installation* chapter.

Twisted, shielded wiring is required for operating power; terminal GND (52) serves as a connection for the cable shield.

Analog Inputs

Analog inputs are used by the DECS-250 in the regulation and control of a standalone or paralleled generator. These inputs monitor generator voltage and current and bus voltage.

Generator Voltage Sensing

The DECS-250 senses generator voltage through user-supplied voltage transformers (VTs) connected across the generator output. Voltage applied to the inputs is internally scaled by the DECS-250 according to its transformer configuration settings. Voltage applied at these inputs is used to monitor the generator voltage, regulate machine vars and/or power factor, and provide kW and kvar load sharing, generator synchronizing, metering, and protection.

Generator voltage is sensed at terminals V GEN A (13), V GEN B (14), V GEN C (15) and V GEN N (16). Typical generator voltage sensing connections are illustrated in the *Installation* chapter.

Bus Voltage Sensing

Voltage measured at the bus voltage sensing input is used by the DECS-250 when synchronizing the generator with the utility bus. Bus voltage is sensed through user-supplied voltage transformers (VTs). Voltage applied to the inputs is internally scaled by the DECS-250 according to its transformer configuration settings.

Depending upon the number of buses and the type of synchronizing required, either one or two sets of bus-sensing VTs will be used. If dual bus synchronizing is required, the bus sensing transformer configuration is limited to single-phase sensing. In a single breaker system, the bus sensing inputs can be connected in either a single-phase or three-phase configuration.

Bus voltage is sensed at terminals V BUS A (17), V BUS B (18), V BUS C (19), and V BUS N (20). Typical bus voltage sensing connections are illustrated in the *Installation* chapter.

Generator Current Sensing

The DECS-250 senses generator current through current transformers (CTs) installed on the generator output leads. CTs with a nominal rating of 1 Aac or 5 Aac may be used. CTs internal to the DECS-250 provide galvanic isolation between internal circuitry and the current sensing inputs.

Sensed generator current is used by the DECS-250 for metering, regulating generator vars, power factor, and load sharing, and protection purposes. Generator current sensing is mandatory for DECS-250 operation in AVR Droop, power factor, and var regulation modes.

Generator current is sensed at terminals I1+ (36), I1– (37), I2+ (38), I2– (39), I3+ (40), and I3– (41). Typical generator current sensing connections are illustrated in the *Installation* chapter.

Reactive Differential Current Sensing

The DECS-250 senses cross-current compensation current through a current transformer typically connected on the B-phase of each paralleled generator. A CT with a nominal rating of 1 Aac or 5 Aac may be used. A CT internal to the DECS-250 provides galvanic isolation between internal circuitry and the reactive differential current sensing input.

Reactive differential current is sensed at terminals ID+ (42) and ID– (43). Typical cross-current compensation sensing connections are illustrated in the *Installation* chapter.

Reactive Differential Resistor Input

The resistance of the cross-current CT wiring must be as low as possible. A loop resistance less than 10% of the internal cross-current burden resistance of 1.0 Ω enables cross-current operation with negligible voltage droop. If the cross-current CT loop resistance must be higher, adjust the gain or increase the cross-current burden resistance. This is accomplished by adding external resistance in series with DECS-250 terminals ID RES+ (33) and ID RES– (34).

Auxiliary Input

An external, analog control signal can be used for auxiliary control of the DECS-250 regulation setpoint. This input also can be used for limiter scaling or power system stabilizer control.

The auxiliary input accepts a control signal over the range of –10 Vdc to +10 Vdc at terminals VREF+ (25) and VREF– (24).

Remote Excitation Enable Input

Remote enabling and disabling of excitation is provided through application and removal of 24 Vdc at DECS-250 terminals EX-D+ (4) AND EX-D– (3). Remote enabling of excitation requires that:

- Excitation be enabled in software,
- An active ControlNet connection is present, and
- A 24 Vdc signal is applied at the remote excitation enable input.

Analog Outputs

DECS-250 analog outputs consist of the excitation power output and the real-power load sharing input.

Excitation Output

The DECS-250 excitation output supplies power to the generator field by means of a filtered, switching power module that uses pulse-width modulation. It is capable of supplying 15 Adc continuously at voltage up to 125 Vdc. With nominal operating voltage applied, it has a forcing capability of 30 Adc for 10 seconds. The excitation output terminals are labeled

The DECS-250 is equipped with a high-speed circuit for detecting a shorted excitation output. When low impedance is detected, the excitation output is clamped at a very low level. This condition is annunciated by setting the Spare2 bit in the Scheduled Read Data table. The Spare2 bit indication is reset by setting the tag SoftwareExcEN equal to 0 or by cycling the DECS-250 control power.

Ensure that the field resistance in your application does not allow more than 15 Adc to flow continuously at the rated field voltage. Minimum field resistance for common field voltages are provided in the *Specifications* chapter.

Note
A loss of ControlNet network communication with the host Logix PLC will cause the DECS-250 to automatically terminate generator excitation.

Real-Power Load Sharing

In a multi-generator application, the load sharing output enables two or more DECS-250 controllers to load the controlled generators so that the same per unit output is developed by each generator. The DECS-250 supplies an adjustable signal over the range of 0 to 5 Vdc at terminals LS+ (1) and LS– (2). The maximum value, set as the full-scale voltage, represents 100% generator load. The rated kVA, using the rated voltage and rated current, is the base for per unit calculations. The generator may operate at

any value below and including the full-scale voltage. When operating in a parallel system, the DECS-250 monitors the voltage at the LS+ and LS– terminals via an analog-to-digital converter. This voltage is compared to the desired voltage that the DECS-250 is supplying to the other DECS-250 controllers in the system. If the values do not match, the governor will adjust the generator load via ControlNet or Ethernet/IP communications and the host Logix PLC.

Contact Outputs

The DECS-250 has three sets of normally-open contacts for cross-current compensation, redundancy control, and fault annunciation.

Cross-Current Relay Output

The ID RLY output contacts at terminals 27 and 28 close and provide a short-circuit across the CCCT input when the cross-current compensation (reactive differential) function is not active.

Redundancy Relay Output

In a redundant DECS-250 application, this output is used to transfer generator excitation from the primary DECS-250 to the redundant DECS-250 and vice versa. The redundancy relay output terminals are labeled RD RLY (31 and 32). Typical redundancy relay output connections are illustrated in the *Installation* chapter.

Fault Relay Output

The fault relay output closes to annunciate fault conditions selected by the user. The fault enable output tags in the Output table determine which faults activate the fault relay output. The fault relay output terminals are labeled FLT RLY (29 and 30).

Communication

DECS-250 communication is provided through communication ports along with software inputs and outputs.

Network Communication Port

The network communication port is located on the right panel and communicates with an Allen-Bradley Logix PLC. Through this port, RSLogix 5000 software is used to set DECS-250 configuration parameters. Control, metering, and protection settings are communicated to the DECS-250 through this port and DECS-250 firmware is flash-programmable through this port.

The port's hardware type depends upon the DECS-250 style number and can be a ControlNet 1.5 interface or an Ethernet/IP interface.

ControlNet Network Port

A DECS-250 with a style number of LN2SA1C has a ControlNet 1.5 interface that accepts two BNC connectors. If redundancy is desired, use both connectors. Otherwise, either connector can be used. Use the front panel HMI to set the ControlNet network node address (MAC ID).

Ethernet/IP Network Port

A DECS-250 with a style number of LN2SA1D has an Ethernet/IP Device Level Ring (DLR) interface with dual RJ45 network interface jacks.

Redundancy Port

A female DB-9 (RS-232) connector is located on the right panel and is used for communication with a partner DECS-250 in a redundant system. This redundancy enables the backup unit to automatically track the setpoint of the primary unit. Use a null modem cable for this connection. Redundancy port connector pin assignments and cable connections are shown in the *Installation* chapter.

Factory Test Ports

The front-panel USB jack and the RJ45 jack on the right panel serve as factory test and calibration ports. These ports are disabled at the time of shipment and are not intended for customer use.

Software Inputs and Outputs

The host Logix PLC must include the hardware and communication interfaces with the generator, prime mover, power system, and balance of plant equipment that are not specifically included in the DECS-250. The software interface between the DECS-250 and its host PLC is made via the ControlNet software interface. This interface consists of several assembly instances, or data tables.

- Input (Scheduled Read) table: provides time-critical status and fault parameters and control commands from the DECS-250 to the host Logix PLC
- Output (Scheduled Write) table: provides time-critical enable commands, selection commands, and setpoints from the host controller to the DECS-250
- Unscheduled Read table: provides non-time-critical metering data from the DECS-250 to the host controller
- Unscheduled Write table: provides a means to adjust selected gains and energy counter presets while excitation is enabled
- Configuration Write table: contains the basic DECS-250 configuration parameters and is automatically transferred from the host controller to the DECS-250 on power-up and at other times when excitation is not enabled

See the *Software Interface* chapter for more information about the DECS-250 software interface.

Excitation Control Modes

The DECS-250 regulates the generator field excitation current based on the:

- Selected control mode,
- DECS-250 configuration and gain settings,
- Measured generator voltage and current,
- Applicable setpoint or setpoints,
- Value of the auxiliary input signal, and
- Various limiter functions.

Regulation modes are selected and activated by using the software interface to the host Logix PLC. An active ControlNet network connection must exist with the host Logix PLC in order for any regulation mode to be active.

Any one of the following faults will automatically stop DECS-250 excitation:

- Overexcitation voltage,
- Reverse vars, or
- A Logix PLC fault.

Regulation of the excitation current is accomplished by the DECS-250 using a proportional, integral, and derivative (PID) control algorithm. The regulation response of the DECS-250 is determined by your gain settings. Gains for each control mode include:

- Proportional Gain Kp: determines the basic response to changes in generator voltage
- Integral Gain KI: speeds the return to steady-state voltage after a disturbance
- Derivative Gain Kd: speeds the initial regulation response to a disturbance
- Overall Gain (Kg): adjusts the coarse loop gain of the regulator
- Auxiliary Gain: adjust the effect of the auxiliary control input on the regulation output

See the *Configuration* chapter for more information about gains.

Field Current Regulation (FCR)

FCR mode provides manual control of the excitation current. In FCR mode, the DECS-250 measures and controls the field current output to maintain the selected setpoint. The FCR feedback loop includes adjustable PID gains. When operation in FCR mode, automatic voltage control, reactive power control, power factor control, overexcitation limiting, and underexcitation limiting are disabled. To activate FCR mode:

- The gains must be set,
- FCR mode must be selected (tag AVR_FCR_Select = 1),
- The desired setpoint must be written to the FCRSetpt tag,
- Excitation must be enabled (tag SoftwareExcEn = 1), and
- Remote excitation must be enabled (discrete input).

Automatic Voltage Regulation (AVR)

AVR mode provides automatic control of the excitation current. In AVR mode, the DECS-250 controls its excitation output to maintain the prescribed generator voltage setpoint. The AVR feedback loop includes adjustable PID gains. To activate AVR mode:

- The generator voltage metering VTs must be properly connected and configured,
- The AVR gains must be set,
- AVR mode must be selected (tag AVR_FCR_Select = 0),
- The desired setpoint must be written to the AVRSetpt tag,
- Excitation must be enabled (tag SoftwareExcEn = 1),
- Remote excitation must be enabled (discrete input), and
- For constant voltage control, droop must be disabled (tag V_DroopEn = 0).

Power Factor Regulation (PF)

The DECS-250 measures the generator voltages and currents to calculate and regulate the machine power factor. The PF feedback loop includes adjustable proportional and integral gains. To activate PF regulation mode:

- The metering CTs and VTs must be properly connected and configured,
- The DECS-250 PF gains must be set,
- The desired PF setpoint must be written to the PFSetpt tag,
- Excitation must be enabled (tag SoftwareExcEn = 1),
- Remote excitation must be enabled (discrete input),
- AVR mode must be selected (tag AVR_FCR_Select = 0),
- Droop must be enabled (V_DroopEn tag = 1) and selected (Droop_CCC_Select tag = 0),
- Automatic reactive power control must be enabled (tag PF_VAR_En = 1), and
- Power factor control must be selected (tag PF_VAR_Select = 0).

Reactive Power Regulation (Var)

The DECS-250 measures the generator voltages and currents to calculate and regulate the machine reactive power. The var feedback loop includes adjustable proportional and integral gains. To activate var regulation mode:

- The metering CTs and VTs must be properly connected and configured,
- The DECS-250 PF gains must be set,
- The desired reactive power setpoint must be written to the VARSetpt tag,
- Excitation must be enabled (tag SoftwareExcEn = 1),
- Remote excitation must be enabled (discrete input),
- AVR mode must be selected (tag AVR_FCR_Select = 0),
- Droop must be enabled (V_DroopEn tag = 1) and selected (Droop_CCC_Select tag = 0),
- Automatic reactive power control must be enabled (tag PF_VAR_En = 1), and
- Var control must be selected (tag PF_VAR_Select = 1).

Control Mode Setpoint Functions

Each DECS-250 control mode has setpoint functions that provide internal setpoint tracking, remote setpoint adjustment, and a setpoint traverse rate.

Internal Tracking

The DECS-250's non-active regulation mode setpoints will track the setpoint of the active regulation mode. This minimizes the potential for instability that can occur when switching from one operating mode to another. Two settings configure the internal tracking function: tracking rate and tracking delay.

Tracking Rate

The internal tracking rate setting defines the time constant of a first-order filter through which the DECS-250 matches the non-active modes with the active mode. This parameter is scaled in seconds. The time for the tracking function to settle out after a step change in the operating setpoint is approximately four times the internal tracking rate setting.

Tracking Delay

The internal tracking delay setting adjusts the delay of the tracking function in order to prevent a non-active mode from being adjusted into an undesirable condition. For example, if AVR mode is active and the generator sensing VT fails open, the excitation output will go to a full-on state. Applying a tracking delay will reduce the likelihood of this undesirable operating point being transferred to a new operating mode.

Auxiliary Input Regulation Adjustment

Remote control of the DECS-250 setpoint is provided through the DECS-250 remote excitation enable input. A typical application for this input is with a power system stabilizer where adjusting the regulation point of the generator can increase system stability during power system kW swings.

Application of an analog signal at terminals EX-D+ (3) and EX-D (4) over the range of –10 Vdc to +10 Vdc changes the setpoint of the selected operating mode. The setpoint changes 1% of the applicable rated value for each (positive or negative) volt applied, multiplied by the auxiliary gain setting for the active regulation mode. Auxiliary input gain settings range from –99 to 99. If the gains are set at zero, the auxiliary input is disabled.

Traverse Rates

Traverse rate settings for each regulation mode define the rate at which the system changes to the new setpoint when the operating mode changes. At the instant the mode is changed, the DECS-250 begins changing its operating point from the internal tracking setpoint to the new mode's setpoint at a rate determined by the new mode's traverse rate.

Increasing the traverse rate causes the DECS-250 output to change more slowly. A value of 200 seconds is a special case that causes the DECS-250 to hold the existing regulation output until the new setpoint is adjusted to become equal to or pass through the previous mode's setpoint.

The tag **SetptTraverseActive** equals 1 when the DECS-250 is traversing between the internal tracking setpoint and the new operating mode's setpoint. This tag is equal to 0 when the operating point has completed traversing to the new mode's setpoint. The **SetptTraversActive** tag is used by the host Logix PLC to determine when the new mode has taken control.

The *Configuration* chapter provides more information about the scaling and units of the traverse rate settings.

Operation with Paralleled Generators

DECS-250 functions that enable operating in parallel generator applications include droop compensation, cross-current compensation, and line drop compensation.

Droop (Reactive Current Compensation)

Droop (reactive current compensation) is a method of controlling reactive current when a generator is connected in parallel with another energy source. Droop adjusts the generator voltage in proportion to the measured generator reactive power. The DECS-250 calculates reactive power by using the measured generator voltage and current. The droop adjustment represents the percent reduction from the generator voltage setpoint when the generator produces reactive power corresponding to the rated generator kVA. To activate droop:

- The generator metering CTs and VTs must be properly connected and configured,
- The desired droop setpoint must be written to the **V_DroopSetpt** tag,
- Excitation must be enabled (tag **SoftwareExcEn** = 1),
- Remote excitation must be enabled (discrete input),
- DECS-250 AVR mode must be selected (tag **AVR_FCR_Select** = 0),
- Droop must be enabled (**V_DroopEn** tag = 1) and selected (**Droop_CCC_Select** tag = 0), and
- Automatic reactive power control must be disabled (tag **PF_VAR_En** = 0).

Cross-Current Compensation

Cross-current (reactive differential) compensation enables multiple generators to be connected in parallel and share reactive load. Connection of an additional metering CT to the DECS-250 cross-current compensation (ID) input is required. Without the cross-current compensation input applied, the DECS-250 operates in standalone mode.

During cross-current compensation, the DECS-250 monitors the ID, V GEN A, and V GEN C inputs to adjust the excitation level. A gain adjustment is provided to allow tuning. Cross-current compensation is configured and controlled through the software interface to the Logix PLC.

To activate cross-current compensation:

- The controlled generators must be connected in parallel,
- The cross-current CT and generator VTs must be connected properly,
- The desired cross-current compensation gain must be written to the **CrossCurrentGain** tag
- Excitation must be enabled (tag **SoftwareExcEn** = 1),
- Remote excitation must be enabled (discrete input),
- AVR mode must be enabled in the DECS-250 (tag **AVR_FCR Select** = 0),
- Droop must be enabled **(V_DroopEn** tag = 1), and
- Cross-current compensation must be selected (**Droop_CCC_Select** tag = 1).

Line Drop Compensation

Line drop compensation adjusts the generator voltage proportional to the generator load. It can be used to maintain voltage at a load that is at a distance from the generator. With increasing load, generator output reactive current is used to increase the generator voltage, based on the user-configurable line drop compensation factor. Line drop compensation is adjustable from 0 to 10% of the voltage setpoint in 0.1% steps, which represents the percent voltage change at raged generator current. Line drop compensation cannot be used with droop or cross-current compensation.

Soft Start Mode

Soft start mode provides for an orderly buildup of generator voltage from residual to the voltage setpoint in the desired time with minimal overshoot. When operating in Soft Start mode, the DECS-250 adjusts the voltage reference based on the Soft Start Initial Voltage and Soft Start Time settings. Figure 3-2 illustrates operation of the soft start function with the Soft Start Initial Voltage setting at 30% and the Soft Start Time setting at 8 seconds.

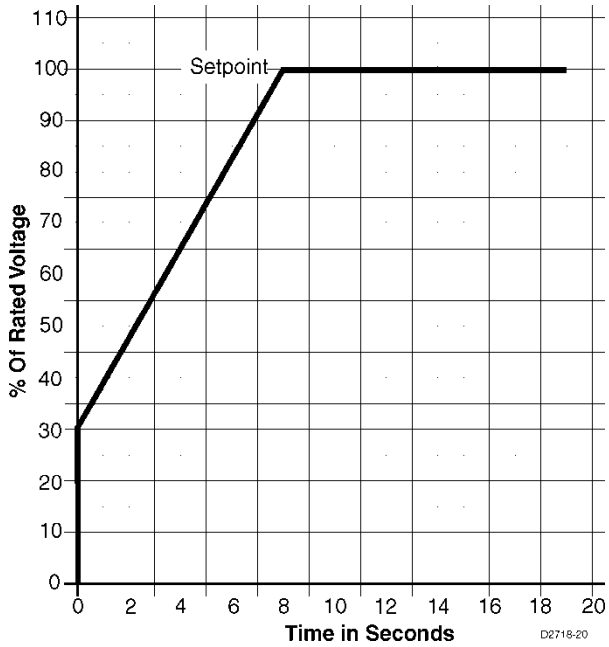

Figure 3-2. Soft Start Operation Example

Limiters

DECS-250 limiters include a volts-per-hertz limiter, overexcitation limiter, and underexcitation limiter. These limiters function to maintain generator operation within safe areas of its capability curve.

Generator Capability Curve

The generator capability curve graphically depicts the combination of real and reactive power that a generator is able to produce (or absorb, in the case of reactive power) without damage caused by overheating. A typical generator capability curve is shown in Figure 3-3.

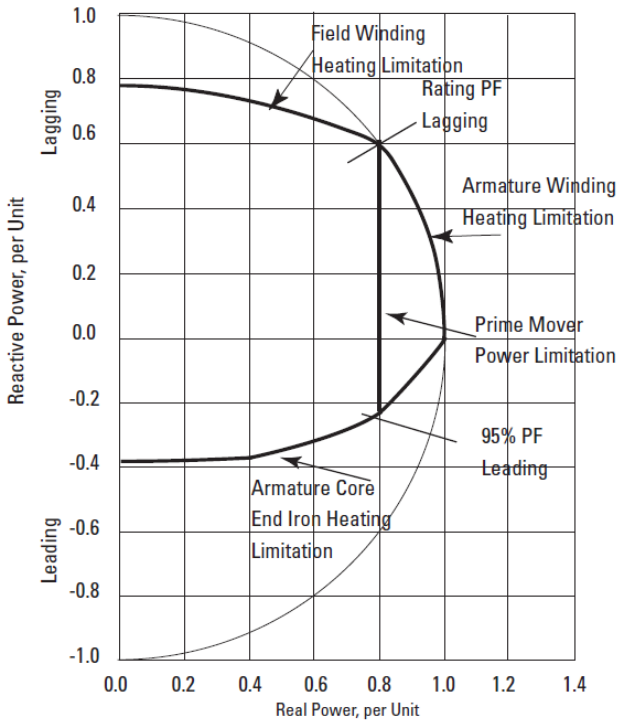

Figure 3-3. Generator Capability Curve Example

Volts per Hertz Limiter

Volts per hertz limiting reduces the generator output voltage by an amount proportional to the generator frequency. This limiting protects the generator from overheating and reduces the impact on the prime mover when adding a large load. An example of a typical volts per hertz characteristic, as displayed in the RSLogix 5000 software DECS-250 configuration screen, is shown in Figure 3-4.

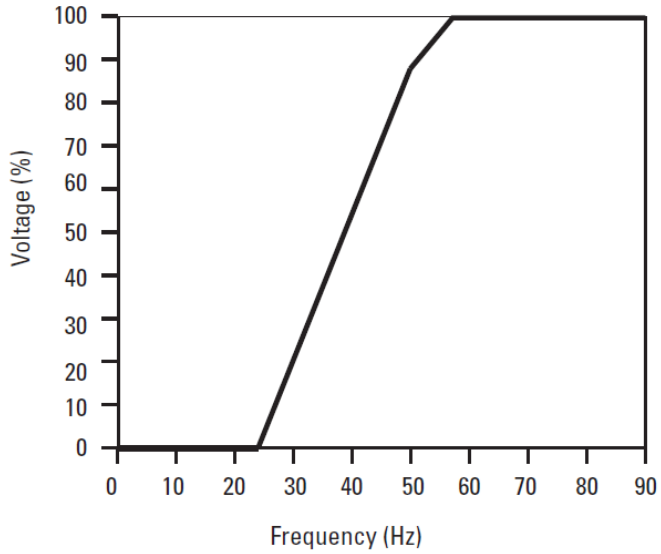

Figure 3-4. Example of Underfrequency Slope and Knee Voltages

When the generator frequency decreases, the DECS-250 automatically adjusts the voltage setpoint so that the generator voltage follows the underfrequency slope.

The user defines the volts per hertz characteristic in the DECS-250 with two configurable knee frequencies and two configurable slopes. The slopes are expressed in per unit volts ÷ per unit hertz. For a nominal 120 Vac, 60 Hz system, a slope of 1 corresponds to 2 Vac per Hz. Generator output voltage is maintained at the configured level for any frequency at or above the configured knee frequency up to 90 Hz. Excitation is inhibited when the frequency is at or below the 10 Hz cutoff frequency.

Volts per hertz limiting is automatically enabled in AVR mode and limits the voltage increase in Soft Start mode.

Overexcitation Limiter (OEL)

The overexcitation limiter (OEL) monitors the level of field current supplied by the DECS-250 CGCM and limits it to prevent field overheating.

The OEL can be enabled in all regulation modes. OEL behavior in manual mode can be configured to limit excitation or issue an alarm.

Two styles of overexcitation limiting are available in the DECS-250 CGCM: summing point or takeover. The summing point-type OEL provides a control signal to the summing point of the voltage regulator's control loop, whereas the takeover-type OEL overrides the voltage regulator's primary control loop. Refer to the DECS-250 CGCM mathematical model for more details.

OEL settings are illustrated in Figure 3-5 and Figure 3-6.

Summing Point OEL

Summing point overexcitation limiting compensates for field overcurrent conditions while the machine is offline or online. Offline and online OEL behavior is dictated by two separate groups of settings.

Offline OEL

For offline operation, there are two levels of summing-point overexcitation limiting: low and high. Figure 3-5 illustrates the relationship of these levels.

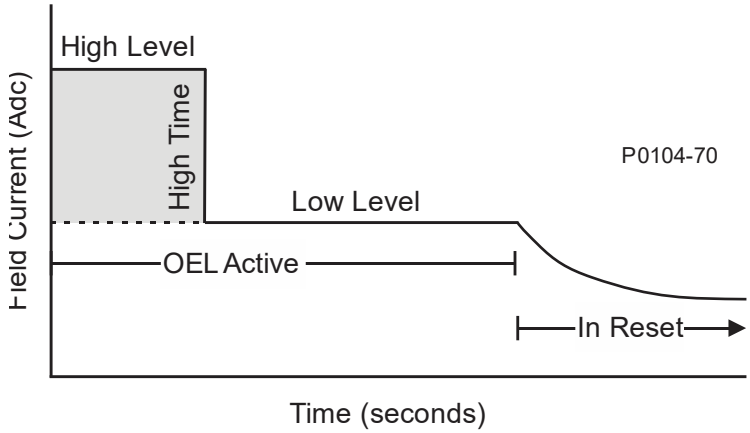

Figure 3-5. Summing Point, Offline, Overexcitation Limiting

Initially, excitation current will not be permitted to exceed the High Level threshold. Upon expiration of the High Time delay, excitation current will be limited to the value of the Low Level setting. Excitation current will be permitted to remain indefinitely at this level as needed by the application. The OEL is active any time that excitation current is equal to or above the Low Level threshold

Online OEL

For online operation, there are three levels of summing-point overexcitation limiting: low, medium, and high. Figure 3-6 illustrates the relationship of these levels.

Initially, excitation current will not be permitted to exceed the High Level threshold. Upon expiration of the High Time delay, excitation current will no longer be allowed to exceed the Medium Level threshold. After the expiration of the Medium Time delay, excitation current will be limited to the value of the Low Level setting. Excitation current will be permitted to remain indefinitely at this level as needed by the application. The OEL will be active any time that excitation current is equal to or above the Low Level threshold.

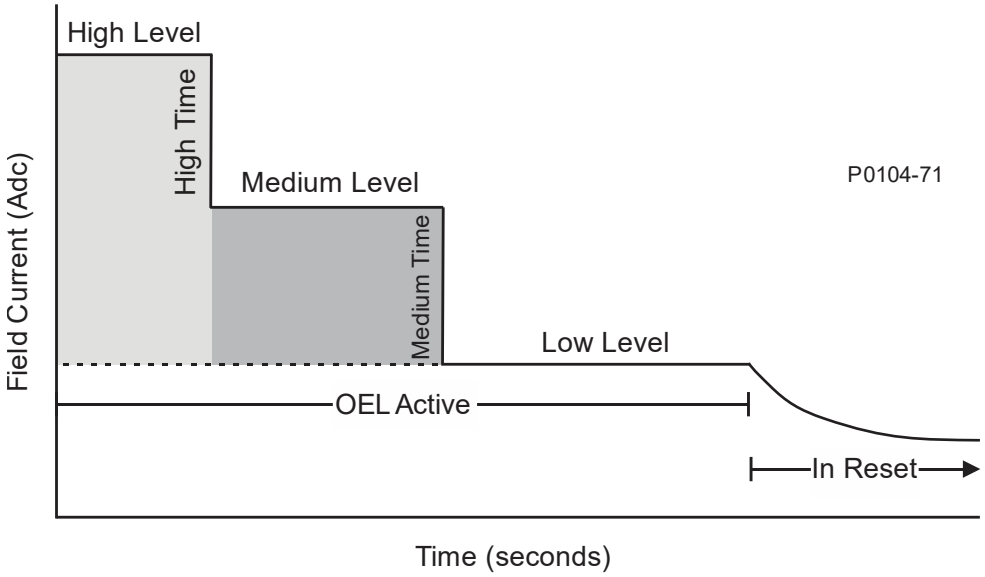

Figure 3-6. Summing Point, Online, Overexcitation Limiting

OEL Counters

OEL counters prevent excessive heating of the exciter field that result from repeated overexcitation. Two counters are provided: a reset counter and a time limit counter. The time limit counter monitors the duration of an overexcitation condition. The reset counter counts down from either the high OEL time setting or the sum of the high and medium OEL times, depending on the value of the time limit counter.

If, during an OEL cycle, excitation current decreases below the low current value, the reset counter begins counting down from its present value. If it reaches zero, the time limit counter is reset to zero and a new OEL cycle can then occur.

If the reset counter does not reach zero before the excitation current rises above the low current value, the time limit counter resumes counting where it stopped when the excitation current last decreased below the low current value. If the time limit counter is greater than the programmed high OEL time, the excitation current is limited to the medium current value. This prevents repeated cycling of the exciter field at its highest possible current value.

When the excitation current exceeds the overexcitation limit, the OEL alarm tag **OEL_Active** equals 1. In FCR mode, OEL limiting is not active although the tag is set. This tag is located in the Scheduled Read table. The OEL function meets ANSI/IEEE C50.13.

Takeover OEL

Takeover overexcitation limiting limits the field current level in relation to an inverse time characteristic similar to that shown in Figure 3-7. It overrides the voltage regulator's primary control loop (refer to the DECS-250 CGCM mathematical model for more details). Separate curves may be selected for online and offline operation. If the system enters an overexcitation condition, the field current is limited and forced to follow the selected curve. The inverse time characteristic is defined by Equation 3-1.

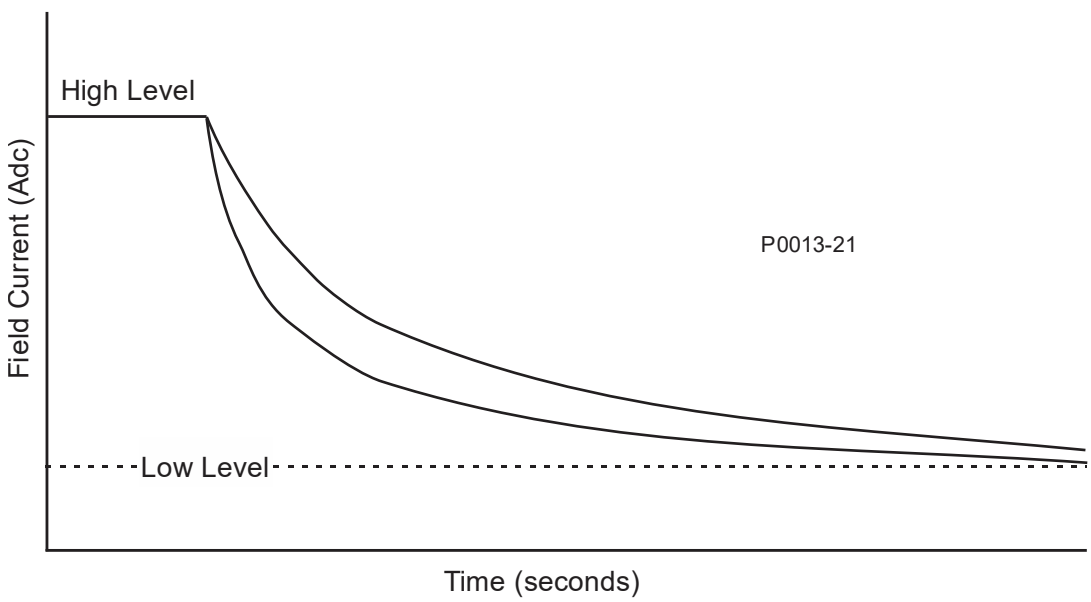

Figure 3-7. Inverse Time Characteristic for Takeover OEL

$$t_{pickup} = \frac{A \times TD}{B + \sqrt{C + D \times MOP}}$$

Equation 3-1. Inverse Pickup Time Characteristic

Where:
t_{pickup} = time to pick up in seconds
A = -95.908
B = -17.165
C = 490.864
D = -191.816

TD = time dial setting <0.1, 20>
MOP = multiple of pickup <1.03, 2.5>

Primary and secondary setting groups provide additional control for two distinct machine operating conditions. Each mode of takeover OEL operation (offline and online) has a low-level, high-level, and time dial setting.

Once the field current decreases below the dropout level (95% of pickup), the function is reset based on the selected reset method. The available reset methods are inverse, integrating, and instantaneous.

Using the inverse method, the OEL is reset based on time versus multiple of pickup (MOP). The lower the field current level, the less time is required for reset. Inverse reset uses the following curve (Equation 3-2) to calculate maximum reset time.

$$Reset\ Time\ Constant = \frac{RC\ \times TD \times 0.05}{1-(MOP \times 1.03)^2}$$

Equation 3-2. Inverse Reset Time Characteristic

Where:
Reset Time Constant = maximum time to reset in seconds
RC = reset coefficient setting <0.01, 100>
TD = time dial setting <0.1, 20>
MOP = multiple of pickup

For the integrating reset method, the reset time is equal to the pickup time. In other words, the amount of time spent above the low-level threshold is the amount of time required to reset.

Instantaneous reset has no intentional time delay.

Underexcitation Limiter (UEL)

The DECS-250's UEL senses the leading var input of the generator and limits any further decrease in excitation to prevent loss of synchronization and excessive end-iron heating during parallel operation. Underexcitation limiting operates in all modes except FCR. The UEL operates in the area below the armature core end iron heating limitation region of the generator capability curve.

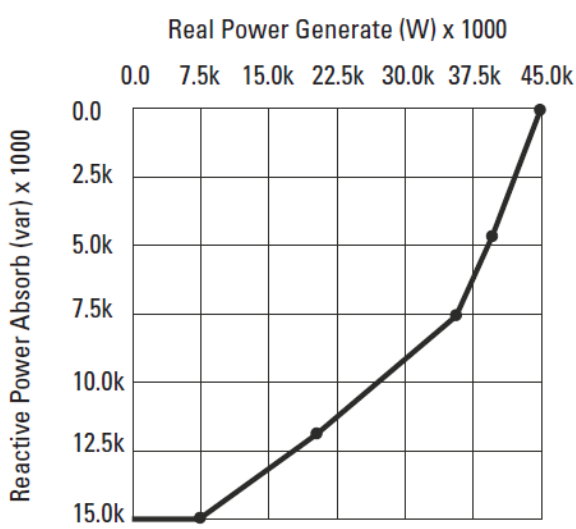

Figure 3-8. Typical UEL Curve

Note
The UEL is not designed to prevent the loss of excitation function from operating.

As shown in the typical UEL curve of Figure 3-8, the DECS-250's customizable limiting curve is defined by a piecewise linear curve specified by five user-selected points.

Protection Functions

DECS-250 protection consists of the following functions:

- Generator undervoltage (27)
- Reverse power (32R)
- Loss of excitation current (40)
- Reverse vars (40Q)
- Phase rotation error (47)
- Generator overcurrent (51)
- Generator overvoltage (59)
- Field overvoltage (59F)
- Loss of sensing (60FL)
- Overfrequency (81O)
- Underfrequency (81U)

Protection faults detected by the DECS-250 are communicated to the host Logix PLC. Fault flags are communicated in the Scheduled Read table. A fault flag is latched until the host controller resets it. The host Logix controller can reset all DECS-250 faults by setting tag **FltReset** equal to 1 once the fault condition is cleared.

The DECS-250 automatically shuts down excitation if any one of the following faults occurs:

- Field overvoltage,
- Reverse vars, or
- A Logix controller fault.

Fault conditions can also be configured to activate the DECS-250 fault relay (FLT RLY) output at terminals 29 and 30. Once configured, the fault relay will operate independently of the host Logix controller program (including Controller Run/Program mode). See the *Configuration* chapter for information about configuring fault relay output operation.

Generator Undervoltage (27)

When the ac generator voltage decreases below the user-specified level for more than the prescribed amount of time, a generator undervoltage fault is annunciated. Once the generator voltage increases above the threshold, the generator undervoltage protection timer is reset. Generator undervoltage protection is disabled during soft start timing or when the **EngineIdle** tag is set. If a generator undervoltage fault occurs, tag **Undr_V_Flt** is set to 1 in the Scheduled Read table.

Reverse Power (32R)

When generator reverse power flow exceeds the reverse power protection threshold for the specified time delay, a reverse power fault occurs. Once the reverse power decreases below 95% of the threshold, the reverse power fault timer resets. A reverse power fault sets tag **RevPwrFlt** at 1 in the Scheduled Read table.

Loss of Excitation Current (40)

When excitation current decreases below the user-specified level for more than the prescribed amount of time, a loss of excitation fault is annunciated. In a redundant DECS-250 system, primary DECS-250 excitation is disabled and a transfer to the secondary DECS-250 occurs. If a loss of excitation fault occurs, tag **LossExcFlt** is set to 1 in the Scheduled Read table. Loss of excitation protection is inhibited during voltage buildup and when the soft start function is active.

Reverse Vars (40Q)

When the level of reverse vars exceeds the characteristic curve for more than the prescribed amount of time, a reverse vars fault is annunciated. The characteristic curve is a line that begins at the user-defined pickup setting at zero real power and extends toward positive reactive power at an angle of 8 degrees. An example of a reverse var characteristic curve is illustrated in Figure 3-9. Once the vars increase above the pickup threshold, the reverse var fault timer resets. When a reverse var fault occurs, the DECS-250 stops excitation and sets tag **RevVARFlt** at 1 in the Scheduled Read table.

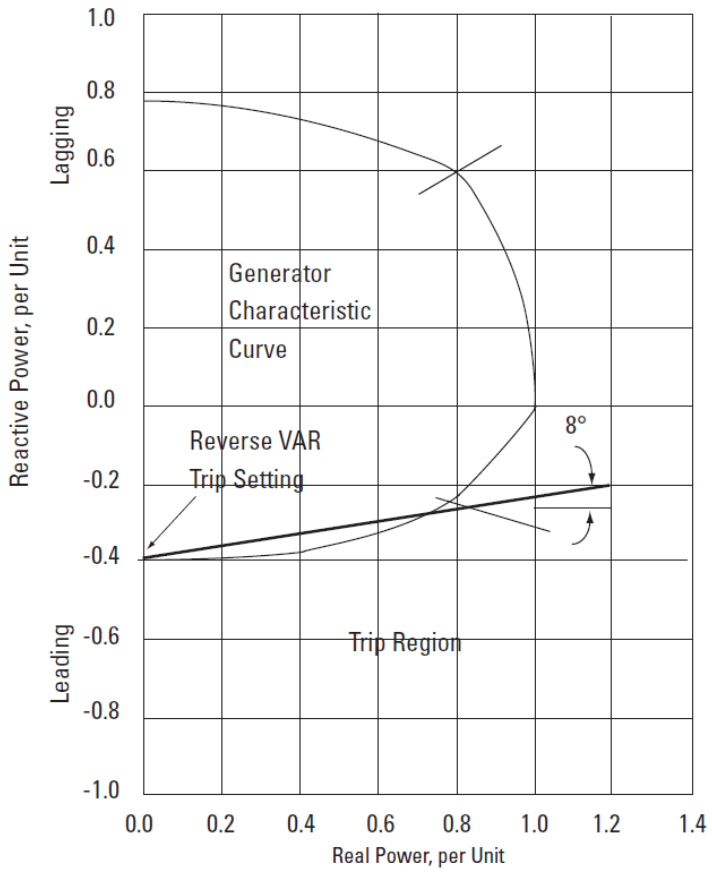

Figure 3-9. Reverse Var Characteristic

Phase Rotation Fault (47)

The DECS-250 calculates the negative sequence voltage of the applied three-phase generator sensing voltage. If the sensed generator phase rotation is opposite to the user-configured wiring rotation, a negative-sequence generator voltage of approximately 100% is obtained. This error will exceed the DECS-250's fixed 47 threshold of 66%. After the fixed, 1 second time delay expires, a phase rotation fault is indicated. A 47 fault is also indicated when a phase loss condition occurs. When a phase rotation fault occurs, tag **PhRotFlt** is set at 1 in the Scheduled Read table.

Generator Overcurrent (51)

A generator overcurrent fault occurs when the generator current exceeds the 51 function setpoint. Overcurrent protection is configured by selecting a time characteristic curve, an overcurrent setpoint, a time dial setting, and a voltage restraint setpoint. When a 51 fault occurs. Tag **Ovr_I_**Flt is set at 1 in the Scheduled Read table. The overcurrent protection function meets IEEE standard C37.112.

Details about the DECS-250 time overcurrent characteristic curves are provided in the *Time Overcurrent Characteristic Curves* appendix.

Generator Overvoltage (59)

When the ac generator voltage increases above the user-specified level for more than the prescribed amount of time, a generator overvoltage fault is annunciated. Once the generator voltage decreases below the threshold, the 59 function timer is reset. When a generator overvoltage fault occurs, tag **Ovr_V_Flt** is set at 1 in the Scheduled Read table.

Field Overvoltage (59F)

When the field voltage increases above the user-specified level for more than the prescribed amount of time a field overvoltage fault is annunciated. Once the field voltage decreases below the threshold, the 59F function timer is reset. When a field overvoltage fault occurs, excitation is stopped and tag **OvrExcFlt** is set at 1 in the Scheduled Read table.

Loss of Sensing (60FL)

For three-wire and four-wire sensing, 60FL detection is based on the logical combination of the following conditions:

a. Average positive sequence voltage is greater than 8.8% of the AVR setpoint,
b. Negative sequence voltage is greater than 25% of the positive sequence voltage,
c. Negative sequence current is less than 17.7% of the positive sequence current,
d. Positive sequence current is less than 1% of the rated current for 0.1 seconds,
e. Generator positive sequence voltage is less than 8.8% of the AVR setpoint, and
f. Positive sequence current is less than 200% of the rated current for 0.1 seconds.

Three-phase loss of sensing is expressed by the following logical formula:

Loss of Sensing = ((1 AND 2) AND (3 OR 4)) OR (5 AND 6)

For single-phase sensing, 60FL detection is based on the logical combination of the following conditions:

a. Average generator terminal line-to-line voltage is less than 70% of the AVR setpoint,
b. Positive sequence current is less than 200% of the rated current,
c. Negative sequence current is less than or equal to 17.7% of the positive sequence current, and
d. Positive sequence current is less than 1% of rated current for 0.1 seconds.

Single-phase loss of sensing is expressed by the following logical forumula:

Loss of Sensing = ((1 AND 2) AND (3 OR 5))

The time delay for the 60FL function is fixed at 0.1 seconds during normal operation and increased to 1.0 seconds during soft start operation. Loss of sensing protection is disabled when the excitation current is less than the Loss of Excitation setpoint. When a 60FL fault occurs, tag **LossSensingFlt** is set at 1 in the Scheduled Read table.

Overfrequency (81O)

When the generator frequency exceeds the user-defined overfrequency setpoint for the prescribed amount of time, an 81O fault is annunciated. Once the frequency decreases below the threshold, the overfrequency fault timer is reset. When an 81O fault occurs, tag **OvrFreqFlt** is set at 1 in the Scheduled Read table.

Underfrequency (81U)

When the generator frequency decreases below the user-defined underfrequency setpoint for the prescribed amount of time, an 81U fault is annunciated. Once the frequency increases above the threshold, the underfrequency fault timer is reset. When an 81U fault occurs, tag **UndrFreqFlt** is set at 1 in the Scheduled Read table.

The underfrequency protection function is disabled during soft start, when no voltage is present at the generator voltage sensing inputs or when the **EngineIdle** tag is set.

Exciter Diode Monitor

The exciter diode monitor can detect one or more open or shorted diodes in the generator rotor. A failed diode triggers annunciation of an exciter diode fault.

The DECS-250 monitors specific harmonic components present in the field current. The frequency of the harmonics is proportional to the system frequency and the ratio between the main and exciter field poles. For example, during normal operation at 60 Hz, a three-phase exciter bridge produces a ripple current frequency of 1,080 Hz:

$$1{,}080\ Hz = 6 \times 60\ Hz \times \left(\frac{12\ exciter\ poles}{4\ main\ poles}\right)$$

A shorted diode produces increased ripple current at one-sixth of the normal ripple frequency (or 180 Hz). Similarly, an open diode shows increased current at one-third of the normal ripple frequency at 360 Hz. The DECS-250 senses harmonics in the one-sixth and one-third harmonic levels to provide protection for those conditions.

When the ripple current at one of these frequencies exceeds the applicable user-specified threshold, a timer is started. Once the time delay is exceeded, an exciter diode fault is annunciated. If the ripple current decreases below the threshold (configured as a percent of measured excitation current) before the timer expires, the timer is reset. When an exciter diode fault occurs, tag **RotDiodeFlt** is set at 1 in the Scheduled Read table.

The exciter diode monitor is inhibited when the field current is less than 1.5 Adc or if the generator frequency is outside the range of 45 to 70 Hz.

Loss of PMG

A loss of excitation power fault is annunciated if the operating power applied at terminals PMG A (49), PMG B (50), and PMG C (51) decreases below 10 Vac for approximately 400 milliseconds or more. When single-phase PMG power is selected, the loss of PMG function monitors power applied at terminals PMG A (49) and PMG C (51). When a loss of excitation fault occurs, tag **LossPMGFlt** is set at 1 in the Scheduled Read table.

Loss of PMG protection is disabled when shunt excitation is selected, the **EngineIdle** tag is set, or the host Logix PLC is operating in Program mode.

Synchronizer

The DECS-250 monitors the generator voltage sensing inputs (V GEN A [13], V GEN B [14], V GEN C [15], and V GEN N [16]) and bus voltage sensing inputs (V BUS A [17], V BUS B [18], V BUS C [19], and V BUS N [20]) to provide synchronization between the generator and either of two buses. Voltage, phase and frequency error parameters and a breaker close permissive signal are provided to the host Logix PLC. This enables the PLC to control the prime mover and achieve voltage matching and phase synchronization.

Caution
To avoid possible equipment damage, the synchronizer function of the DECS-250 must be supervised by an external sync-check protection device.

Synchronization between two buses is possible by measuring the appropriate synchronization parameters. For synchronization between two buses, substitute the term “second bus” for “generator” in the discussion that follows.

When synchronizing between systems with differing metering configurations, synchronizer configuration must account for any phase shift or voltage differences between the two systems. For example, when

synchronizing a three-wire (delta) generator to a four-wire (wye) bus, the synchronization configuration must take into account the 30 degrees of phase shift between the line-to-line voltage and line-to-neutral voltage.

Synchronizer Connection Schemes

The DECS-250 provides information that the host Logix controller uses to synchronize the generator output voltage, frequency, and phase with that of a reference bus or power system. Three-phase, dual bus, and single-phase connection schemes are described as follows.

Three-Phase Scheme

In a three-phase scheme, the three-phase output of the generator and all three phases of the reference system are connected to the DECS-250. This enables the DECS-250 to match the voltage, frequency, phase, and phase rotation of the generator to the reference system. This scheme provides the DECS-250 with the most power system data, allowing it to perform the most thorough synchronization.

To enable a three-phase connection, the Generator and Bus VT Configurations are selected as two-transformer open-delta, three-wire wye, or four-wire wye.

When synchronizing a delta system, the DECS-250 uses line-to-line voltage for voltage, frequency, and phase matching. When synchronizing a wye system, the DECS-250 uses line-to-line voltage for voltage and frequency matching, and line-to-neutral voltage for phase matching.

Dual Bus Scheme

The DECS-250 is able to synchronize a generator to either one of two reference buses. This is achieved by monitoring one line-to-line phase of the two reference buses. The user must select the appropriate bus for synchronization. It is not possible to synchronize to two different buses at the same time. For dual-bus synchronization, the three-phase output of the generator and a single phase from each reference bus are connected to the DECS-250. This enables the DECS-250 to match voltage, frequency, and phase—but not phase rotation—of the generator to the reference system. However, the DECS-250 does verify that the generator output phase rotation matches the user-configured selection of ABC or ACB.

To enable dual-bus synchronization, select the Bus VT configuration as Dual Breaker.

Single-Phase Scheme

Generator synchronizing is possible when only a single line-to-line input is available from the generator or bus. This scheme is used in single-phase systems or in systems where only one phase has a transformer connected for synchronizing purposes. The DECS-250 cannot check phase rotation on the generator output with single-phase generator voltage sensing. The reference bus connection can be either single-phase or three-phase.

To enable single-phase synchronizing, select the Generator VT configuration as Single-Phase.

Configurable Synchronizer Parameters

The DECS-250 provides the required settings to facilitate synchronizing between systems with different voltages and metering configurations. See the *Configuration* chapter for more information.

Initiating Synchronization

Before performing synchronization, the host controller must initialize tags in the Output table to their appropriate values as described below.

Automatic Synchronization

For control of the synchronization bus voltage, frequency, and phase, the host controller sets the **AutoSyncEn** tag to enable the synchronizer to calculate error and correction tags in the software interface. When the synchronizing conditions are met, the DECS-250 sets the proper close breaker tag:

- Dual bus: the DECS-250 performs synchronization by using the generator bus inputs and the active bus inputs.

- Dead bus: if dead bus closure is enabled, the DECS-250 sets the close breaker tag when the generator frequency and voltage are within the configured dead bus limits.

  When the DECS-250 senses that all three (one for single-phase setup) bus voltages are less than 10% of the configured voltage and frequency is less than 20 Hz, it sets the Dead Bus Synchronizing mode tag. The DECS-250 does not calculate voltage or frequency error signals when operating in dead bus mode.

- Phase rotation (three-phase connection only): if the bus and generator are opposite in phase rotation, synchronization fails. The DECS-250 continually checks for phase rotation match when synchronization is active.

Permissive Synchronization

The host controller sets the **PermissiveSyncEn** tag to enable Permissive Synchronization mode. This mode is similar to Automatic Synchronizing mode except that the DECS-250 does not calculate error and correction tags. The DECS-250 sets the proper close breaker tag when the synchronizing conditions are met.

Check Synchronization

The host controller sets the **CheckSyncEn** tag to enable Check Synchronization mode. This mode is similar to Automatic Synchronizing mode except that the DECS-250 does not set a Close Breaker tag. Chheck Synchronization mode is useful for testing the system.

Initiate Synchronization

The host controller set the **InitiateSync** ta to begin synchronization. This tag must remain set during the entire process. If the Initiate Synchronization tag is reset, the DECS-250 terminates synchronization. Similarly, a write of the Unscheduled Write table terminates an active synchronization process.

The Initiate Synchronization tag enables the operation of the selected synchronizing mode. The host controller must select one and only one of the three modes described above before or at the same time as the Initiate Synchronization tag. If no modes are enabled, the DECS-250 sets the Undefined Synchronization mode error flag. If more than one of these inputs is enabled, the DECS-250 sets the Conflict Error flag. In either case, synchronization fails and the DECS-250 sets the Synchronization Failure flag.

Synchronizing Error Calculation

When generator synchronizing is active, the DECS-250 calculates synchronizing errors as follows:

$$Voltage\ Match\ Error = 100 \times \frac{Bus\ Voltage - Generator\ Voltage}{Bus\ Voltage}$$

$$Frequency\ Match\ Error = Bus\ Frequency - Generator\ Frequency$$

$$Phase\ Match\ Error = Bus\ Voltage\ Phase\ Angle - Generator\ Voltage\ Phase\ Angle$$

Synchronizing Control Software Interface

When synchronizing is active, the DECS-250 adjusts the following tag values in the Scheduled Read table.

- Voltage Match Error
- Frequency Match Error
- Phase Match Error
- Voltage Raise and Lower: set when the voltage match error is above or below the voltage acceptance window as defined by the configured synchronizing voltage high and low limits
- Frequency Raise and Lower: set when the frequency match error is above or below the frequency acceptance window as defined by the configured synchronizing frequency high and low limits
- Phase Raise and Lower: set when the phase match error is above or below the phase acceptance window as defined by the configured synchronizing phase high and low limits

- Close Breaker: set when the voltage match error, frequency match error and phase match error have all remained continuously within their respective acceptance windows for the configured acceptance window delay time

Load Sharing

Real-power load sharing enables two DECS-250 controllers to load the controlled generators so that the same per unit output is developed by each generator. A 0 to 5 Vdc signal is developed proportional to the per unit kW output of the generator and fed to the load sharing terminals (LS+ [1] and LS– [2]) through an internal resistor. The configurable full-scale voltage corresponds to the rated generator kW. The load sharing output is updated every 50 milliseconds.

The load sharing terminals are connected in parallel (positive to positive, negative to negative) with other DECS-250 controllers. If a DECS-250's generator is more heavily loaded than the others, its developed load sharing voltage is higher, and current flows out of the DECS-250 and into other devices on the network. A more lightly loaded generator results in a lower load sharing voltage and current flowing into the DECS-250 controller.

The direction and magnitude of current flow is used to develop the Load Share Error value that the DECS-250 provides to the host PLC. The host controller can use this value to control the prime mover governor and balance the generator output with other generators in the system.

Rate of Change

The DECS-250 has two rate-of-change features that work together to protect against an unstable system: Limit and Rate.

Limit defines the maximum per unit load sharing error reported to the host controller.

Rate defines the maximum change in the load sharing error per DECS-250 update cycle, expressed as a percent of rated kilowatts per second. For example, if a load change of 50% is required and the rate is set for 10% per second, the change takes 5 seconds to complete. An internal relay isolates the load sharing circuit whenever the function is not active or when control power is not present.

Metering

The DECS-250 provides true rms metering based on voltage and current samples obtained from the voltage and current sensing inputs. All monitored parameters are derived from these values. Accuracy is specified as a percentage of full scale at 25°C (77°F) across the frequency range of the controller, at unity power factor. Metered parameters are communicated to the host Logix PLC via the Unscheduled Read table.

Table 3-1 lists all parameters metered by the DECS-250. Available metering data is dependent upon the metering wiring mode selected.

Table 3-1. Metered Parameters

Metered Parameter	Metering Wiring Mode				
	Single-Phase	Delta	3-Wire Wye	4-Wire Wye	Dual-Bus
Gen voltages, 3, L-L	CA	AB, BC, CA	AB, BC, CA	AB, BC, CA	-
Gen voltage, avg, L-L	Yes (=CA)	Yes	Yes	Yes	-
Gen voltages, 3, L-N	N/A	N/A	N/A	A, B, C	-
Gen voltage, avg, L-N	N/A	N/A	N/A	Yes	-
Gen currents, 3	A, B, C	A, B, C	A, B, C	A, B, C	-
Gen current, avg	Yes	Yes	Yes	Yes	-
Gen kilowatts, 3	N/A	N/A	N/A	A, B, C	-
Gen kilowatts, total	Yes	Yes	Yes	Yes	-

Metered Parameter	Metering Wiring Mode				
	Single-Phase	**Delta**	**3-Wire Wye**	**4-Wire Wye**	**Dual-Bus**
Gen kVA, 3	N/A	N/A	N/A	A, B, C	-
Gen kVA, total	Yes	Yes	Yes	Yes	-
Gen kvar, 3	N/A	N/A	N/A	A, B, C	-
Gen kvar, total	Yes	Yes	Yes	Yes	-
Gen power factor, 3	N/A	N/A	N/A	A, B, C	-
Gen power factor, avg	Yes	Yes	Yes	Yes	-
Gen frequency	Yes	Yes	Yes	Yes	-
Excitation current	Yes	Yes	Yes	Yes	-
Gen kilowatthours	Yes	Yes	Yes	Yes	-
Gen kvarhours	Yes	Yes	Yes	Yes	-
Gen kVAhours	Yes	Yes	Yes	Yes	-
Diode ripple level	Yes	Yes	Yes	Yes	-
Load share error	Yes	Yes	Yes	Yes	-
Voltage match error	*	*	*	*	*
Sync phase error	*	*	*	*	*
Sync frequency error	*	*	*	*	*
Bus voltages, 3, L-L	CA	AB, BC, CA	AB, BC, CA	AB, BC, CA	N/A
Bus voltage, avg, L-L	Yes (=CA)	Yes	Yes	Yes	Yes
Bus voltages, 3, L-N	N/A	N/A	N/A	A, B, C	N/A
Bus voltage, avg, L-N	N/A	N/A	N/A	Yes	N/A
Bus A frequency	Yes	Yes	Yes	Yes	Yes
Bus B frequency	N/A	N/A	N/A	N/A	Yes
Gen phase rotation	N/A	Yes	Yes	Yes	Yes
Bus phase rotation	N/A	Yes	Yes	Yes	N/A

* Results are updated only while synchronization is active (tag **InitiateSync** = 1)

Three-phase generator-side metering is independent of the synchronization mode in one- or two-breaker schemes. In a two-breaker scheme, single-phase bus-side metering is provided only for the selected bus.

For information about metering accuracy, see the *Specifications* appendix. Sign conventions of metered power and current values is illustrated in Figure 3-10.

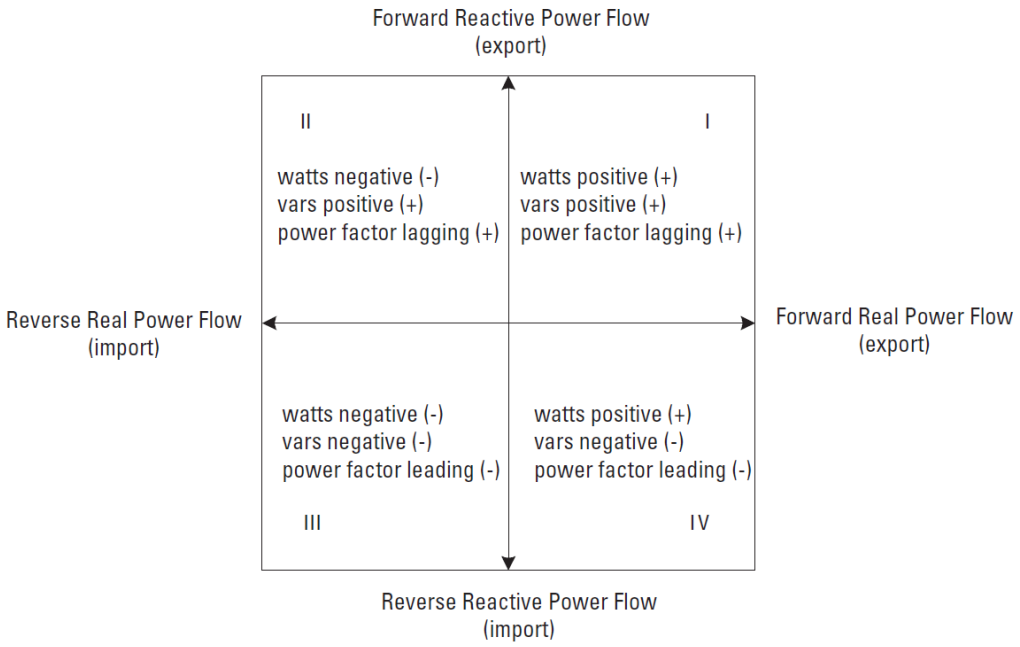

Figure 3-10. Power System Metering Sign Conventions

Redundancy

The DECS-250's redundancy capability enables automatic transfer of excitation control to a second DECS-250. In a redundant DECS-250 application, the host Logix PLC is primarily responsible for sensing power system conditions that require a transfer of control. The DECS-250 can also initiate a transfer of control in case of certain DECS-250 failures.

The DECS-250 has two hardware provisions to support redundancy: the redundancy communication port and the redundancy relay output.

Redundancy Communication Port

The redundancy ports of the partner DECS-250 controllers are connected together and communicate through a null modem cable. Through this communication channel, the DECS-250 controllers exchange setpoint tracking information to support a "bumpless" transfer. The secondary DECS-250 can sense a failure in the primary DECS-250 and initiate an automatic transfer of control.

If redundancy communication is lost between redundant DECS-250 controllers, both DECS-250 controllers assume the role of primary DECS-250 and supply excitation current to the field. Because of this, the host Logix PLC must be programmed to take corrective action by disabling one of the DECS-250 controllers in this instance.

Redundancy Relay Output

The redundancy relay output contacts (RD RLY [31 and 32]) close when the DECS-250 is operating as the primary DECS-250. If the DECS-250 experiences a failure or is operating as the secondary DECS-250, the output contacts open. In a redundant DECS-250 application, this output is configured to energize a relay that connects the excitation output of the primary DECS-250 to the generator field.

When the excitation outputs from two DECS-250 controllers are connected through relays to the generator field, you must place fly-back diodes across the field winding to provide a path for current flow during a transfer. To prevent errors in field current measurement, place three or four diodes in series. If fewer diodes are used, the field current splits between the external diode and the internal DECS-250 circuitry and impedes accurate DECS-250 field current measurement.

Typical redundancy relay and fly-back diode connections are shown in the *Installation* chapter.

Redundancy Operation

Redundant DECS-250 controllers must both be connected to the generator and bus VTs and the generator and cross-current CTs, as applicable. Connect the excitation outputs to the exciter field through user-supplied relays as shown in the *Installation* chapter. You must also connect the two DECS-250 controllers with a redundancy communication cable and ensure that the configuration of each DECS-250 matches.

In a redundant DECS-250 application, the DECS-250 controllers are normally designated as primary and secondary, depending on the order in which the host controller enables excitation. With excitation disabled, each DECS-250 starts in Secondary mode. When the host controller enables excitation on the first DECS-250, it checks for tracking information on the redundancy communication channel. If no tracking information is received, the DECS-250 switches to Primary mode. When the host controller subsequently enables excitation on the secondary DECS-250, it begins receiving tracking information and remains in Secondary mode. The primary DECS-250 indicates its status by setting the **Spare1** tag in the software interface to the host controller.

If the primary DECS-250 fails or if is excitation output is disabled, it stops sending tracking data on the redundancy communication channel. When the secondary DECS-250 senses a loss of tracking data, it automatically switches to Primary mode and takes over control of excitation. It continues serving as the primary DECS-250 until the host controller disables it.

Once the primary and secondary DECS-250 roles have been established by the host controller, they remain in their respective roles indefinitely. You can force a transfer by disabling excitation on the primary DECS-250. This causes the secondary DECS-250 to sense a loss of tracing information, switch to Primary mode, and assume control of excitation.

Following a transfer, if the failed, primary DECS-250 is repaired and returned to service, it detects tracking information from the primary DECS-250 and remains in Secondary mode. In this state it is capable of taking over if the primary DECS-250 fails.

In a typical redundant DECS-250 application, the host Logix controller determines the generator's online or offline status by monitoring the status of the generator breaker. When operating offline, the DECS-250 normally regulates generator voltage in AVR mode. The host controller monitors generator voltage and other conditions. If those conditions indicate a failure of the primary DECS-250, the host controller initiates a transfer by disabling excitation from the primary DECS-250. The secondary DECS-250 senses the loss of tracing information from the primary DECS-250, designates itself the primary, energizes its redundancy relay output, and takes control of excitation.

When operating online, that is with the generator breaker closed and the generator operating in parallel with other generators, the DECS-250 normally operates in var or power factor mode to regulate reactive power flow. The host controller monitors generator conditions as in offline mode and initiates a transfer to the secondary DECS-250 as appropriate. When operating online, the generator voltage is relatively fixed. Therefore, the host controller can monitor a different set of conditions, such as overexcitation or underexcitation.

Host controller operation is dependent on user-supplied logic programming.

A DECS-250 will stop communicating with its partner DECS-250 if any one of the following events occur:

- Digital signal processor fault,
- Loss of redundant communication,
- Watchdog time-out, or
- Loss of ControlNet communication.

Redundancy Tracking

Redundancy tracking between the secondary and primary DECS-250 controllers reduces the potential for instability that can occur when transferring control between the two controllers. Redundancy tracking is controlled by two settings: the redundancy tracking rate and the redundant tracking delay.

Redundancy Tracking Rate

The redundancy tracking rate defines the rate at which the primary DECS-250 matches the output of the secondary DECS-250 with its own output. This setting is scaled in seconds per full-scale excursion of the excitation output.

Redundant Tracking Delay

The redundant tracking delay adjusts the delay of the tracking function to prevent the secondary DECS-250 output from being adjusted into an undesirable state.

For example, with AVR mode active in the primary DECS-250, if the generator sensing VT fails open, the excitation output goes to a full-on state. Applying a tracking delay reduces the likelihood of this undesirable operating point to be transferred to the secondary DECS-250 when it takes over control.

Watchdog Timer

A watchdog timer time-out indicates that the DECS-250 is not capable of executing the proper instructions, including those required to operate the fault relay output. When the watchdog timer times out, the DECS-250 stops excitation, the internal microprocessor is reset, and the relay outputs are disabled.

4 • Configuration

Introduction

This chapter provides generic setup and verification procedures for the DECS-250 and RSLogix 5000® software used in a power generation system. The various configuration parameters required to tailor the DECS-250 to a specific application are presented. Because every application is unique, read this chapter carefully and ensure that the configuration entries are appropriate for the system being implemented.

Configuration Overview

Perform the following steps when using RSLogix 5000 software to configure the DECS-250.

1. Gather the necessary information and equipment.
2. Create a new module.
3. Enter the configuration for the module.
4. Edit the configuration for a module when changes are needed.

Preparation

The *Configuration Record* appendix provides a table for recording configuration settings. It is suggested that you make a copy, use it to record the setup for each DECS-250, and retain these records for future reference.

The following system information is required in order to configure the DECS-250:

- Rated frequency
- Rated voltage
- Rated current
- Rated real power
- PMG rated voltage
- Full-load exciter field voltage
- No-load exciter field voltage
- Full-load exciter field current
- Generator direct access transient time constant T'_{do}
- Generator exciter field time constant T_e
- Number of main and exciter field poles
- Generator capability curve
- Generator decrement curve

Consult with the generator manufacturer to be sure that you have the correct data.

Record System Parameters

Verify and record the system and generator information required for configuration of the DECS-250. Typically, this information can be obtained from the generator nameplate, manufacturer data sheets, and system electrical drawings.

Equipment Required

You will need a suitable personal computer running RSLogix 5000 software. This software is used to configure the DECS-250 for the desired operation. RSLogix 5000 software contains a device profile that provides a user interface to the DECS-250 configuration.

Create a New Module in the ControlLogix Controller

Perform the following steps to create a new module in the ControlLogix controller with RSLogix 5000 software.

Note
You must be offline when you create a new module.

1. Under I/O Configuration, right-click 1756-CNB(R) and select New Module from the menu (Figure 4-1).

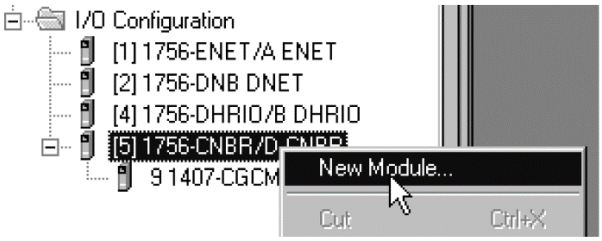

Figure 4-1. Select New Module . . .

The Select Module Type dialog box (Figure 4-2) appears. Add the DECS-250 as a ControlNet module under the 1756-CNB(R) ControlNet Bridge module in the controller.

2. Select 1407-CGCM, click Create, and then, in the Select Major Revision dialog box (Figure 4-2), enter the Major Revision of the host firmware (for example 4, where the host firmware revision is 4.x or 2, where the host firmware is revision 2.x).

Note
You must enter the correct Major Revision at this time. Once the module is created, do not change the Major Revision number. If you need to change the Major Revision number at a later time, you must delete the module and configure a new module.

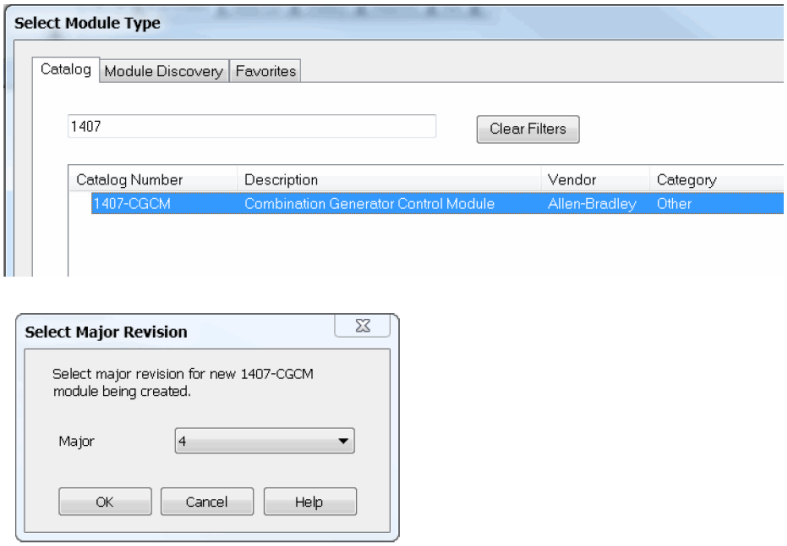

Figure 4-2. Select Module Type and Major Revision

3. Click OK. The Module Properties dialog box (Figure 4-3) appears.
4. Enter a Name for the module, its ControlNet Node address, and its Revision. In this case, the Revision is the minor revision number. For example, you would enter 25 when the host firmware revision is 4.25.
5. Select an Electronic Keying mode to suit your application needs and click Finish.

Note

Alternately, you can click Next to begin configuring the DECS-250 at this point. See *Apply the Configuration to the DECS-250* for more information.

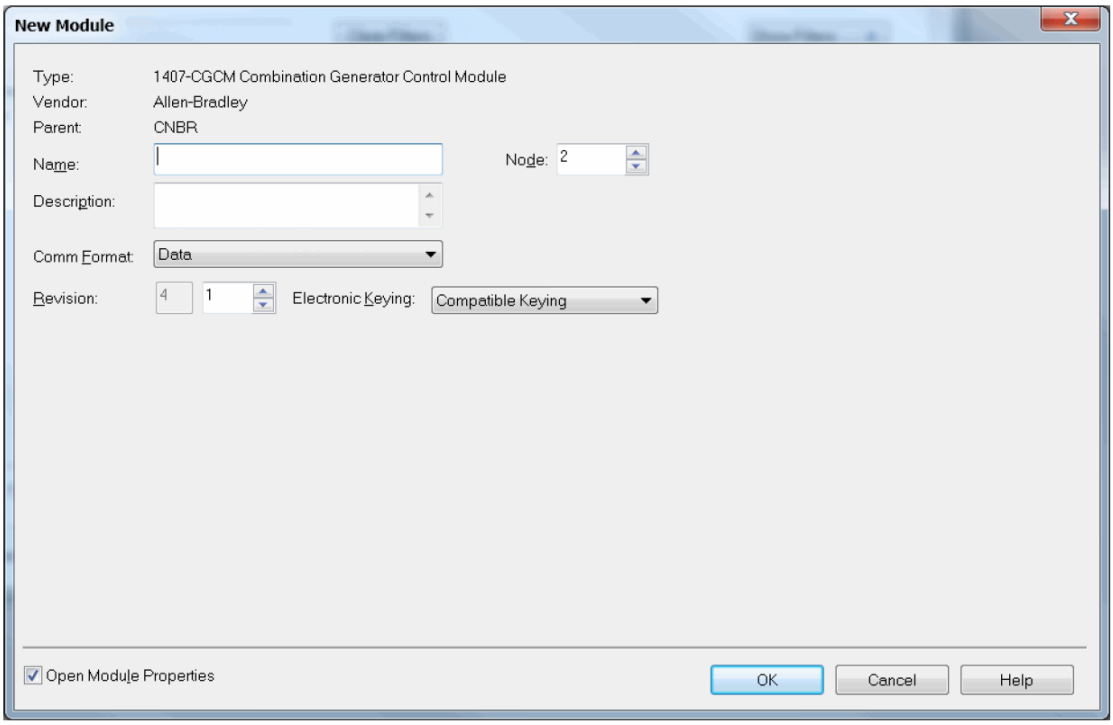

Figure 4-3. New Module Properties

Once a module is added, you must schedule the connection to the DECS-250 with RSNetWorx for ControlNet software.

Electronic Keying

Warning!

Avertissement!

Use caution when using the disable keying option. If used incorrectly, this option can lead to personal injury or death, property damage or economic loss.

Soyez prudent lorsque vous utilisez l'option de désactivation de la saisie. Si elle n'est pas utilisée correctement, cette option peut entraîner des blessures ou la mort, des dommages matériels ou des pertes économiques.

Although the DECS-250 does not physically reside in a ControlLogix chassis, electronic keying provides protection against module mismatch.

You must select one of the following keying options for the DECS-250 during module configuration:

- Exact match: all of the parameters described below must match or the inserted module rejects a connection to the controller,
- Compatible module: a unit with host firmware major revision 3 or 4 functions as a unit with host firmware major revision 2 if so configured when the new module is created, or
- Disable keying: the inserted module does not reject a connection to the controller.

An I/O module that is connected in a ControlLogix system compares the following information for itself to that of the original configuration:

- Vendor,
- Product type,
- Catalog number, and
- Major revision.

This feature can prevent the inadvertent operation of a control system if a DECS-250 is replaced with an incompatible unit.

Device Setup

You must configure the DECS-250 for proper operation. Configuration tabs in the module setup screen divide the required information into subcategories. Evaluate the system and generator information to determine the appropriate configuration settings and use the configuration tabs to enter the settings.

Note
Some screens shown in this publication can vary slightly from the RSLogix 5000 software that is currently provided. Please review each screen carefully.

Apply the Configuration to the DECS-250

The configuration tabs provide a simple way for you to enter and edit DECS-250 configuration parameters. Changes made to the configuration are not always sent to the DECS-250 immediately. Configuration data is stored in two controller tags in the ControlLogix controller: the Configuration tag and the Unscheduled Write tag.

Refer to the *DECS-250 Software Interface* chapter for details on these data tags.

The Unscheduled Write tag contains the parameters from the Gain tab along with the Line Drop Voltage Compensation from the Voltage tab. The Configuration tag contains all other DECS-250 configuration parameters.

Configuration data from the Configuration tag is written automatically to the DECS-250 only when excitation is not enabled and one of the two following conditions occur:

- A connection is first established to the DECS-250, or
- You change the configuration with the configuration tabs.

The Unscheduled Write data tag must be written to the DECS-250 by using a message instruction in the controller program.

Refer to the *DECS-250 Software Interface* chapter for more information on the program interface for DECS-250 configuration.

Configuration Tabs

As shown in the following paragraph, enter the initial settings (parameters) to match your system application for each of the configuration tabs. Review the settings and click OK when complete.

Descriptions for the configuration tabs labeled General, Connection, and Module Info are provided in Rockwell publication 1756-PM001, *Logix5000 Controllers Common Procedures*.

Each tab contains four action buttons at the bottom of the tab. These buttons function as follows:

- OK: accepts the entered values for each screen and returns the user to the previous screen
- Cancel: exits the screen without accepting any changed values
- Apply: applies the current settings without leaving the screen
- Help: accesses the help menu

RSLogix 5000 software performs configuration data checking as specified by the limits shown in the data tables. The data checking verifies that the entry is within range for the device. However, it does not verify that is reasonable for the application. You must be sure that the entry is reasonable for the specific application. If an out-of-range parameter is entered in a Configuration tab, a message box reports the error and the appropriate parameter limits.

Warning!

Avertissement!

Data limit checking does not ensure that values are appropriate for the application.

La vérification des limites de données ne garantit pas que les valeurs sont appropriées pour l'application.

Generator Tab

The Generator tab is used to configure the DECS-250 to the design ratings of the controlled generator. Enter the generator's nameplate ratings in the appropriate fields of the Generator tab. Generator tab settings are shown in Figure 4-4 and described as follows.

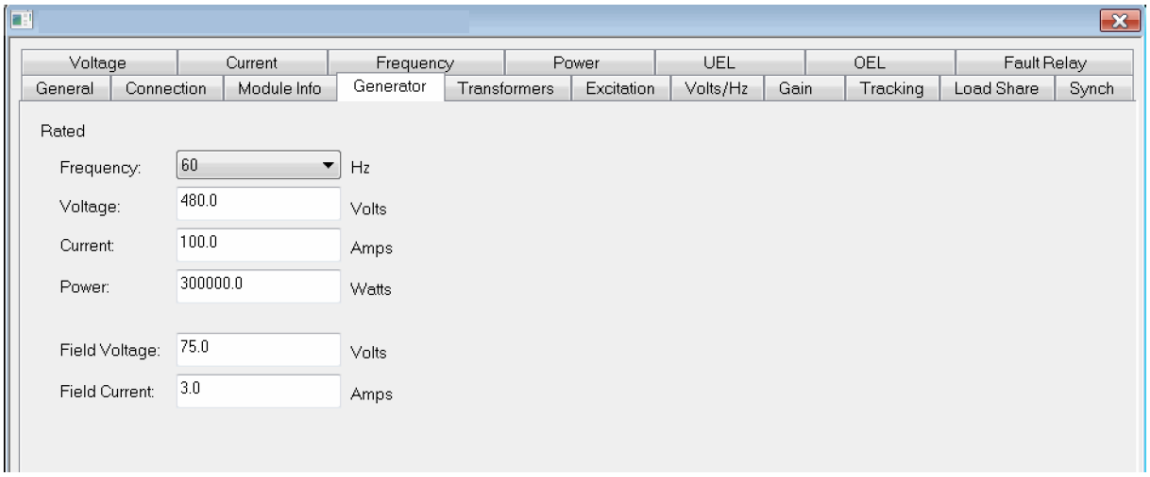

Figure 4-4. Generator Tab Settings

Rated Frequency

Sets the generator's rated frequency in hertz. Sets the value of tag **GenRatedFreq** in the Configuration table.

Rated Voltage
Sets the generator's rated line-to-line voltage in ac volts. Sets the value of tag **GenRated_V** in the Configuration table.

Rated Current
Sets the generator's rated current in ac amperes. Sets the value of tag **GenRated_I** in the Configuration table.

Rated Power
Sets the generator's rated power in watts. Sets the value of tag **GenRated_W** in the Configuration table.

Rated Field Voltage
Sets the generator exciter's rated field voltage while the generator is operating at rated voltage, kW, and kvar. Sets the value of tag **GenRatedExcV** in the Configuration table.

Rated Field Current
Sets the generator exciter's rated field current in dc amperes. This is the level of current that must be supplied to the exciter while the generator is operating at rated voltage, kW, and kvar. Sets the value of tag **GenRatedExcI** in the Configuration table.

Transformer Tab

The Transformer tab is used to match the DECS-250 with the configuration of the generator voltage and current sensing transformers. To configure the Transformer tab, the system wiring configuration must be known. The settings entered in the Transformers tab must correspond to the actual wiring configuration. Refer to the *Installation* chapter for information about wiring configurations. Refer to the VT and CT manufacturer's data for assistance in entering the correct primary and secondary values.

Transformer tab settings are shown in Figure 4-5 and described as follows.

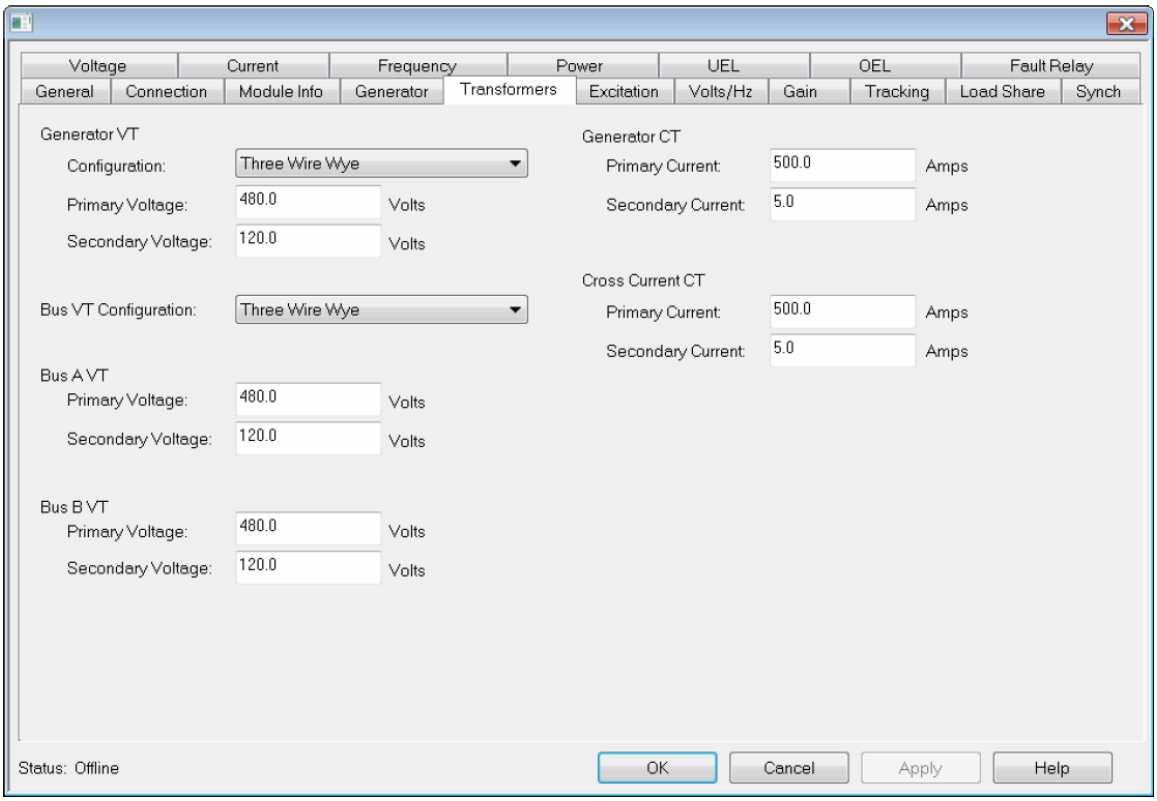

Figure 4-5. Transformers Tab Settings

Generator VT Configuration
The available generator VT configuration selections are Single-Phase, Two-Transformer Open Delta, Three-Wire Wye, or Four-Wire Wye. Use the Two-Transformer Open Delta setting for any delta configuration. This parameter is stored in tag **GenVT_Config** in the Configuration table.

Generator VT Primary Voltage
The primary voltage rating of the generator VT is stored in tag **GenVT_Pri_V** in the Configuration table.

Generator VT Secondary Voltage
The secondary voltage rating of the generator VT connected to V Gen A, V Gen B, and V Gen C, (and V Gen N for wye configurations) of the DECS-250. This parameter is stored in tag **GenVT_Sec_V** in the Configuration table.

Bus VT Configuration
The available bus VT configuration selections are Single-Phase, Two-Transformer Open Delta, Three-Wire Wye, Four-Wire Wye, and Dual Breaker. This parameter is stored in tag **BusVT_Config** in the Configuration table. For applications that require synchronizing to one of two buses, Dual Breaker must be selected

Bus A VT Primary Voltage
The primary voltage rating of the bus VT is stored in tag **BusA_VT_Pri_V** in the Configuration table.

Bus A VT Secondary Voltage
The secondary voltage rating of the bus VT connected to V Bus A, V Bus B, V Bus C, (and V BusN for wye configurations) of the DECS-250. This parameter is stored in tag **BusA_VT_Sec_V** in the Configuration table.

Bus B VT Primary Voltage
The primary voltage rating of the second bus VT when dual breaker bus VT configuration is selected. This parameter is stored in tag **BusB_VT_Pri_V** in the Configuration table.

Bus B VT Secondary Voltage
The secondary voltage rating of the second bus voltage transformer connected to V Bus B, and V Bus N of the DECS-250. This parameter is stored in tag **BusB_VT_Sec_V** in the Configuration table.

The Bus B VT settings are used only by the DECS-250 if the Bus VT configuration selection is dual breaker.

Generator CT Primary Current
The primary current rating of the generator CTs. This parameter is stored in tag **GenCT_Pri_I** in the Configuration table.

Generator CT Secondary Current
The secondary current rating of the generator CTs connected to the DECS-250's I1, I2, and I3 input terminals. This parameter is stored in tag **GenCT_Sec_I** in the Configuration table.

Cross-Current CT Primary Current
The primary current rating of the generator cross-current CT. this parameter is stored in tag **CCCT_Pri_I** in the Configuration table. It is used for monitoring generator reactive current in paralleling applications.

Cross-Current CT Secondary Current
The secondary current rating of the generator cross-current CT connect to the DECS-250 ID+ and ID– terminals. This parameter is stored in tag **CCCT_Sec_I** in the Configuration table. It is used for monitoring generator reactive current in paralleling applications.

Excitaton Tab

The Excitation tab is used to configure DECS-250 settings related to operation and protection of the exciter. Excitation tab settings are shown in Figure 4-6 and described as follows.

Soft Start Initial Voltage
The generator voltage setpoint that is applied immediately after enabling the DECS-250 excitation output. This parameter is stored in tag **SoftStart_InitLevel** in the Configuration table. Its value is a percentage of the nominal generator rated voltage. This parameter must be set higher than the generator residual voltage.

Soft Start Time
The desired time, in seconds, to ramp up from the Soft Start Initial Voltage to the nominal generator output voltage. This parameter is stored in tag **SoftStartTime** in the Configuration table.

Overexcitation Voltage Setpoint

Establishes the overexcitation voltage setpoint used by the DECS-250. This setpoint is stored in tag **OvrExcV_Setpt** in the Configuration table and scaled in volts.

> **Note**
>
> Coordinate the overexcitation voltage setpoint and time delay settings with the OEL function settings to protect the exciter from overheating while avoiding nuisance tripping from normal field forcing during transient conditions.

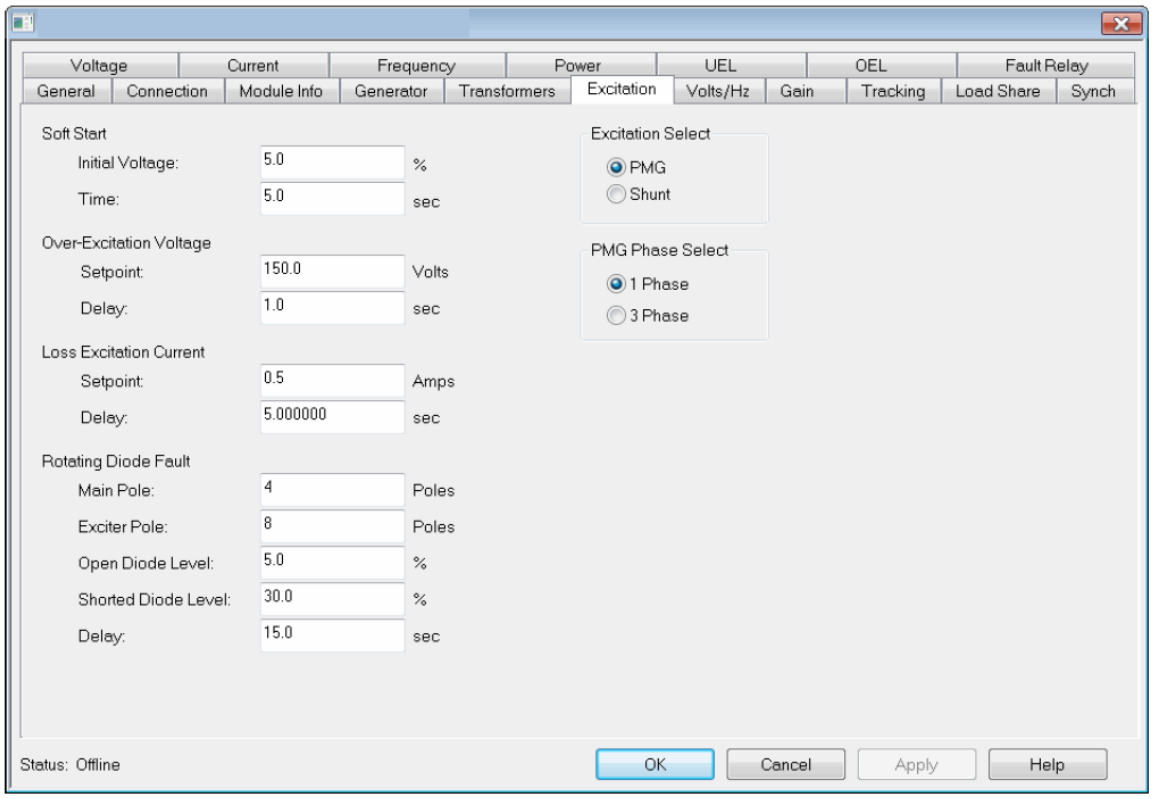

Figure 4-6. Excitation Tab Settings

Overexcitation Time Delay

Establishes the time, in seconds, to annunciate a fault once the overexcitation voltage setpoint has been exceeded. This setpoint is stored in tag **OvrExcV_TimeDly** in the Configuration table.

Loss of Excitation Current Setpoint

Establishes the level of excitation current that is considered to be the minimum needed to maintain generator synchronization when in parallel with other power sources such as a utility grid. This setpoint is stored in tag **LossExc_I_Setpt** in the Configuration table and scaled in amperes. Excitation current in excess of the loss of excitation current setpoint enables loss of sensing protection.

Loss of Excitation Current Delay

Establishes the amount of time in seconds that the excitation current must be continually below the Loss of Excitation Current Setpoint before the DECS-250 annunciates a loss of excitation fault. This setpoint is stored in tag **LossExc_I_TimeDly** in the Configuration table.

Rotating Diode Fault Main Pole

Indicates the number of poles of the generator main field. This parameter is stored in tag **MainPole** in the Configuration table.

Rotating Diode Fault Exciter Pole
Indicates the number of poles of the generator exciter field. This parameter is stored in tag **ExciterPole** in the Configuration table.

Rotating Diode Fault Open Diode Level
Establishes the percent ripple at which the rotating diode monitor alarm turns on when an open diode condition occurs. This parameter is stored in tag **OpenDiodeMonitorLevel** in the Configuration table and is expressed in percent of maximum ripple current.

Rotating Diode Fault Shorted Diode Level
Establishes the percent ripple at which the rotating diode monitor alarm turns on in the event a shorted diode condition occurs. This value is stored in the Configuration table as tag **ShortedDiodeMonitorLevel** and is expressed in percent of maximum ripple current.

Rotating Diode Fault Delay
Establishes the time duration that the ripple current must be at or above the fault level before the DECS-250 annunciates a rotating diode fault. Tag **DiodeMonitorTimeDelay** in the Configuration table stores this value, expressed in seconds. Refer to the *Startup* chapter for more information about configuring rotating diode protection parameters.

Excitation Select
Selects the excitation power source. This parameter is stored in Boolean tag **PMG_Shunt_Select** in the Configuration table. In this tag, 0 = PMG and 1 = Shunt. Select PMG to enable loss of PMG sensing. Select Shunt for obtaining excitation power from the generator terminals and for systems using series boost.

PMG Phase Select
Establishes whether the excitation power source to the DECS-250 is single-phase or three-phase. This assures correct operation of the loss of PMG sensing function. This parameter is stored in Boolean tag **PMG_1Ph_3Ph_Select** in the Configuration table. In this tag, 0 = single phase and 1 = three-phase.

Volts/Hz Tab

The Volts/Hz tab is used to configure DECS-250 settings related to operation of the volts per hertz compensation function. The parameters define a curve, which determines the volts per hertz response. Volts/Hz tab settings are shown in Figure 4-7 and described as follows.

Volts per Hertz Upper Knee Frequency
Establishes the frequency at which the V/Hz characteristic starts to reduce the generator voltage as a function of generator frequency. Tag **VperHz_HiKneeFreq** in the Configuration table stores this value, expressed in hertz. The upper knee frequency must be greater than the lower knee frequency.

Volts per Hertz Upper Slope
Establishes the rate at which the V/Hz characteristic reduces the generator voltage as a function of generator frequency between the upper and lower knee frequencies. This value is stored as tag **VperHz_HiSlope** in the Configuration table. It is expressed as a number that reflects a per unit change in voltage for each per unit change in frequency.

Volts per Hertz Lower Knee Frequency
Establishes the frequency at which the V/Hz characteristic starts to reduce the generator voltage at the lower slope rate as a function of generator frequency. This value is stored as tag **VperHz_LoKneeFreq** in the Configuration table and it is expressed in hertz. The lower knee frequency must be less than the upper knee frequency.

Volts per Hertz Lower Slope
Establishes the rate at which the V/Hz characteristic reduces the generator voltage as a function of generator frequency below the Lower Knee Frequency setting. This value is stored as tag **VperHz_LoSlope** in the Configuration table and is expressed as a number that reflects a per unit change in voltage for each per unit change in frequency.

Validate & Graph Button
This button becomes active when a parameter has been changed on the Volts/Hz tab. When clicked, the V/Hz curve established by the knee and slope values is plotted in the Volts/Hz tab.

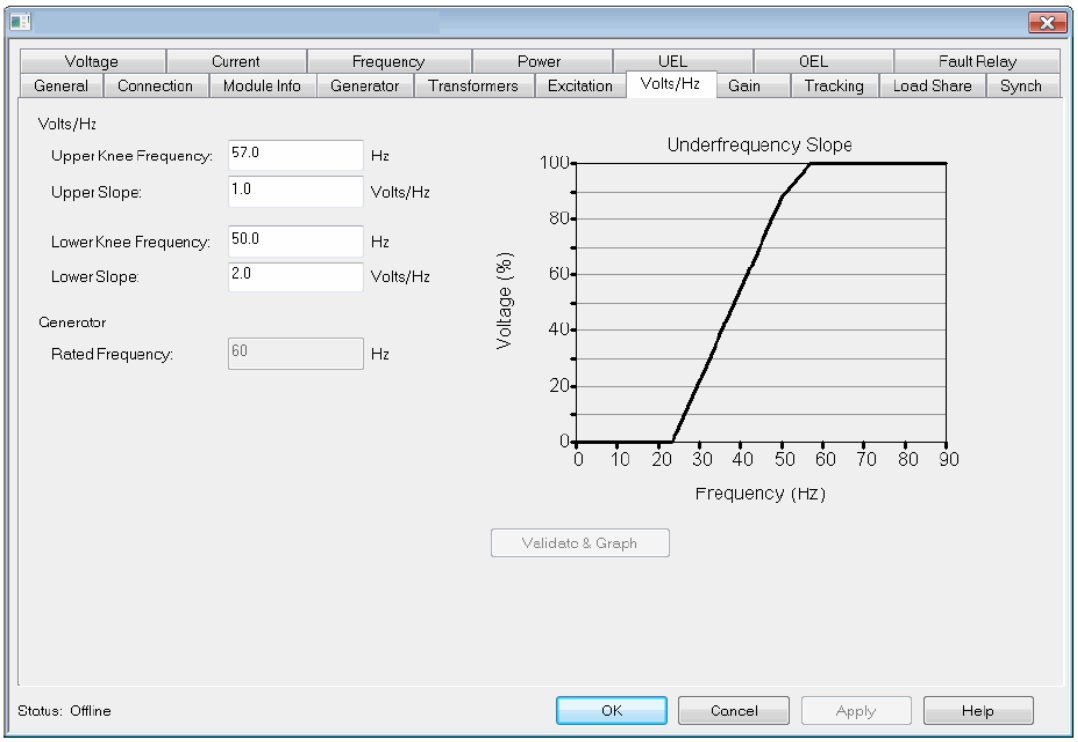

Figure 4-7. Volts/Hz Tab Settings

OEL Tab

The OEL tab is used to configure DECS-250 settings related to operation of the overexcitation limiting (OEL) function. The values entered in this tab establish the thresholds and time delays that determine the behavior of the overexcitation limiter. Refer to the generator manufacturer for information such as exciter full-load and forcing current for setting online and offline conditions. Refer to the *Operation* chapter for more information about OEL operation. OEL tab settings are shown in Figure 4-8 and described as follows.

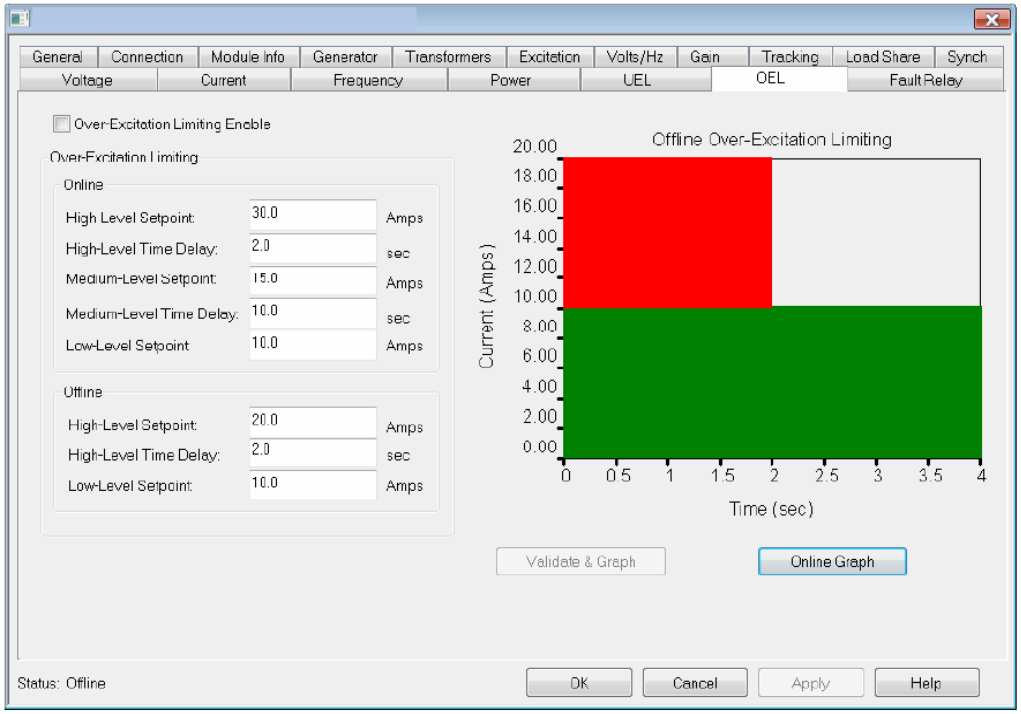

Figure 4-8. OEL Tab Settings

Overexcitation Limiting Enable Checkbox

Select this checkbox to enable overexcitation limiting. Tag **OEL_En** in the Configuration table stores this parameter. In addition to selecting the checkbox, the **OEL_En** tag in the Output (Scheduled Write) Data table must also be set to enable this function.

Online OEL and Offline OEL Settings

Figure 4-9 illustrates DECS-250 online OEL operation. Callouts in Figure 4-9 are listed in Table 4-1 with the corresponding tags. These Configuration table tags are set by the like-named fields in the OEL tab. They are expressed as amperes and seconds, respectively.

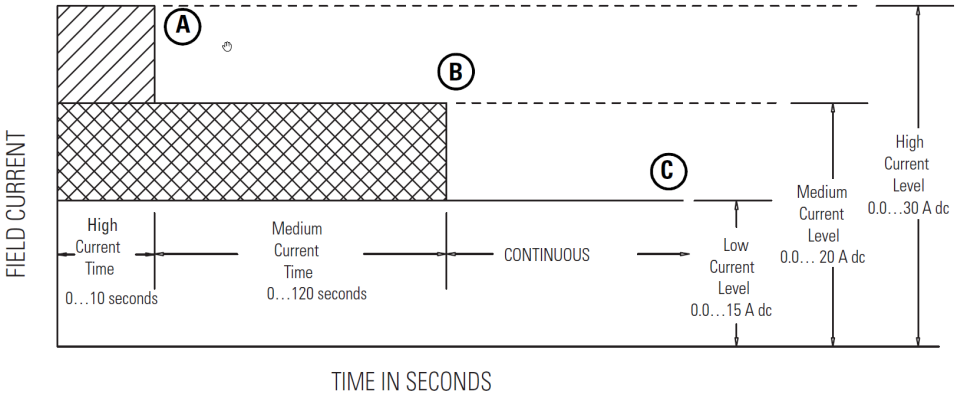

Figure 4-9. Online OEL Operation

Table 4-1. Online OEL Tags

Callout	Tags
A	**OEL_OnlineHiSetpt** and **OEL_OnlineHiTimeDly**
B	**OEL_OnlineMedSetpt** and **OEL_OnlineMedTimeDly**
C	**OEL_OnlineLoSetpt**

Figure 4-10 illustrates DECS-250 offline OEL operation. Callouts in FIG are listed in TABLE with the corresponding tags. These Configuration table tags are set by the like-named fields in the OEL tab. They are expressed as amperes and seconds, respectively.

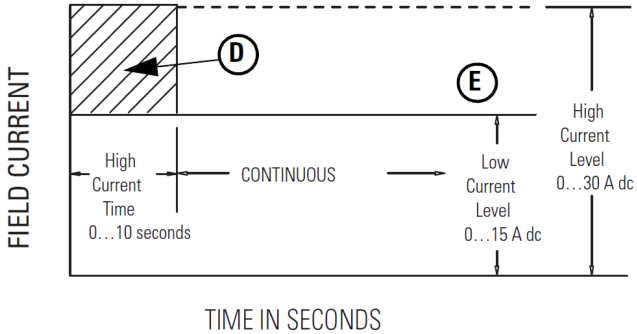

Figure 4-10. Offline OEL Operation

Callout	Tags
D	**OEL_OffineHiSetpt** and **OEL_OfflineHiTimeDly**
E	**OEL_OfflineLoSetpt**

Validate & Graph Button

Clicking this button updates the graph in the OEL tab after entering new values.

Online/Offline Graph Button

This button toggles the display of the online or offline OEL characteristics. The resulting graph pictorially represents the OEL settings.

UEL Tab

The UEL tab is used to configure the DECS-250 underexcitation limiter (UEL) function. Values entered on this tab establish breakpoints in a piecewise linear curve that defines the characteristic curve for this function. Consult the generator manufacturer for the proper setting information.

UEL tab settings are shown in Figure 4-11 and described as follows. See the *Operation* chapter for more information about the UEL function.

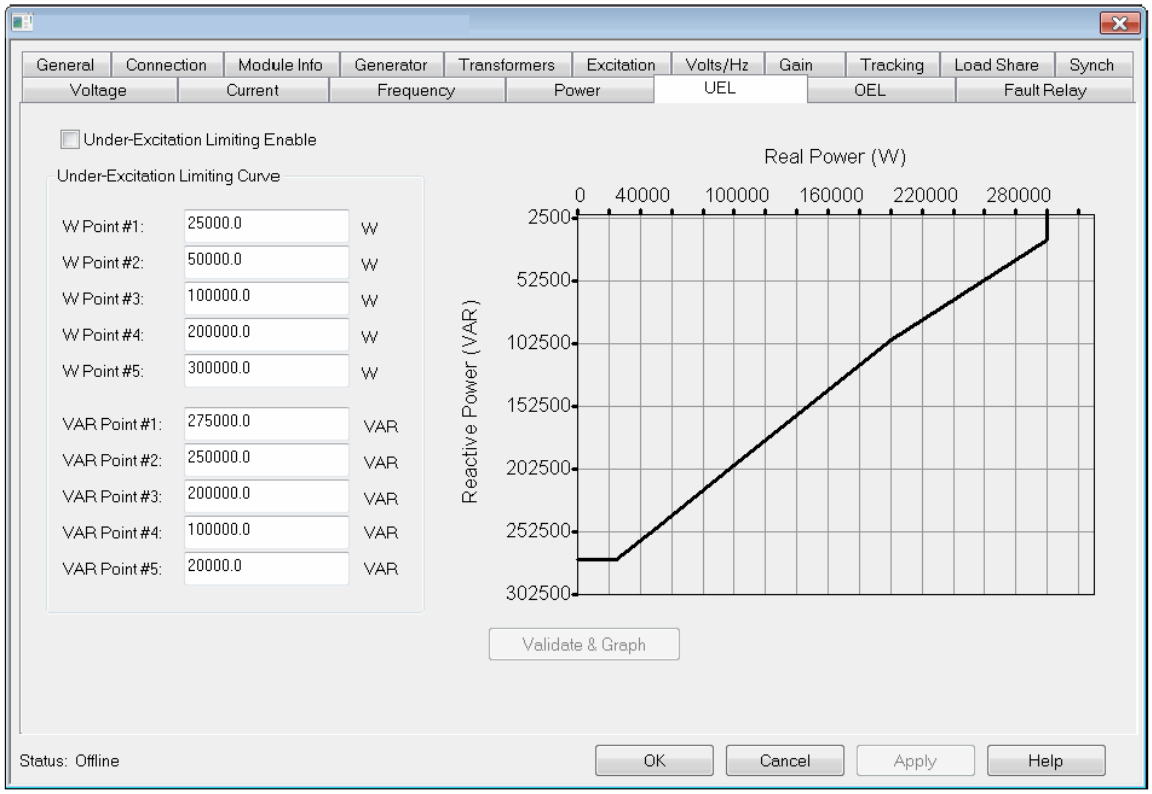

Figure 4-11. UEL Tab Settings

Underexcitation Limiting Enable Checkbox

Tick this checkbox to enable overexcitation limiting. Tag **UEL_En** in the Configuration table stores this parameter. In addition to ticking the checkbox, the **UEL_En** tag in the Output (Scheduled Write) Data table must also be set to enable this function.

UEL Curve Points

Figure 4-12 illustrates a sample UEL curve. The numbered points in Figure 4-12 are listed in Table 4-2 with the corresponding tags. These Configuration table tags are set by the like-named fields in the UEL tab.

Var values are actually negative, indicating leading vars. Configure the var and watt tags with increasing real power values in points 1 through 5. these tags define the curve breakpoints. As shown, the curve continues horizontally left from point 1 and vertically up from point 5. The tags are expressed in watts or vars respectively.

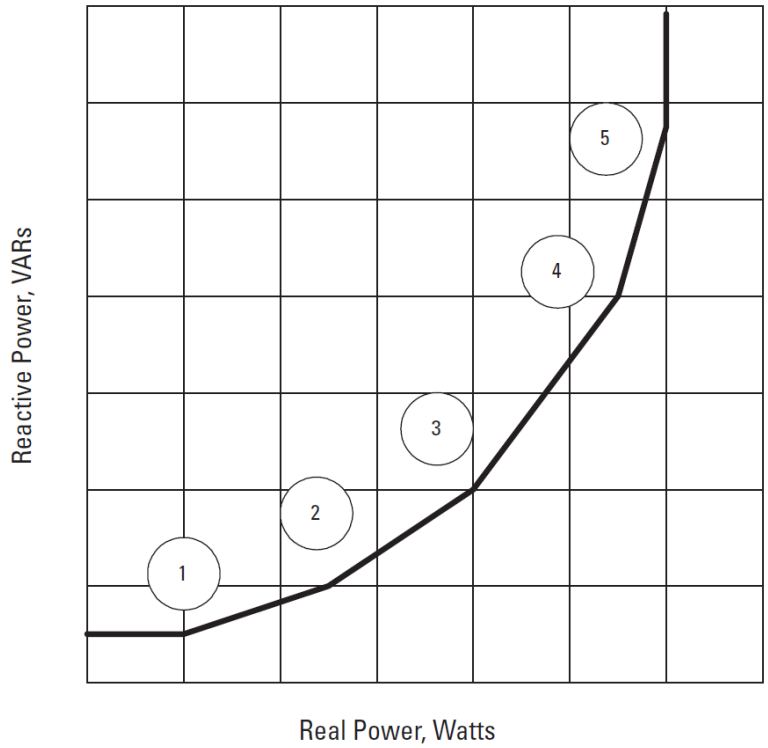

Figure 4-12. UEL Curve Example

Table 4-2. UEL Curve Points/Tags

Point	Tags
1	**UEL_Curve_W_Pt1** and **UEL_Curve_VAR_Pt1**
2	**UEL_Curve_W_Pt2** and **UEL_Curve_VAR_Pt2**
3	**UEL_Curve_W_Pt3** and **UEL_Curve_VAR_Pt3**
4	**UEL_Curve_W_Pt4** and **UEL_Curve_VAR_Pt4**
5	**UEL_Curve_W_Pt5** and **UEL_Curve_VAR_Pt5**

Gain Tab

The Gain tab is used to configure the DECS-250 gain parameters necessary for operation of excitation control. Gain tab settings are shown in Figure 4-13 and described as follows. Except as otherwise noted, gain parameters are unit-less.

Gain tab parameters are stored in the Unscheduled Write table and are not automatically written to the DECS-250.

See the *Software Interface* chapter for information about the user-programming necessary to transfer gain parameters.

AVR/FCR Control

The AVR/FCR gains determine the response of the main control loop of the voltage regulation function. The PID calculator software available with the RSLogix 5000 software can be used to assist in determining the appropriate initial AVR gain settings for Kp, Ki, Kd, and Kg. These settings can be fine-tuned during system startup.

More information about tuning regulator gains is provided in the *Startup* chapter.

Proportional Gain Kp. Sets the proportional gain, which determines the characteristic of the dynamic response to changes in generator voltage. If the transient response has too much overshoot, decrease

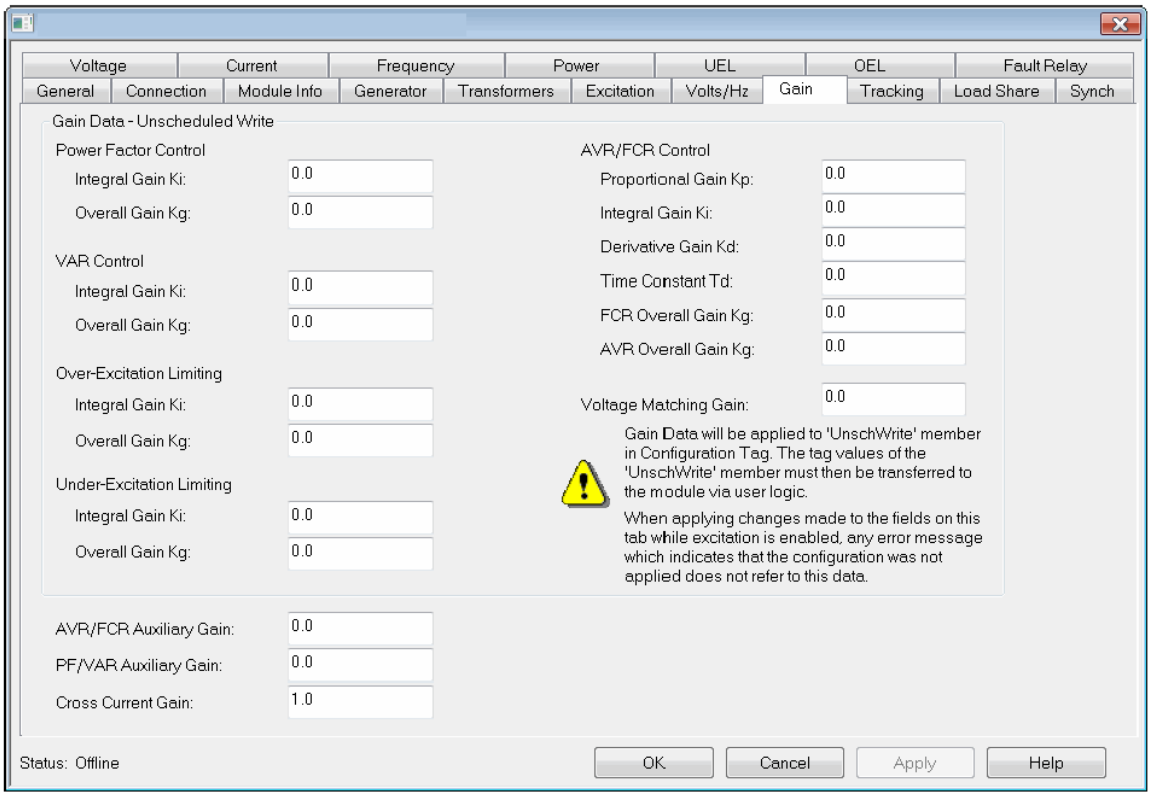

Figure 4-13. Gain Tab Settings

Kp. If the transient response is too slow with little or no overshoot, then increase Kp. Tag **AVR_fcr_Kp** stores this parameter in the Unscheduled Write table.

Integral Gain Ki. Sets the integral gain. To improve the transient response to a step change, increase Kd. If there is too much jitter in the steady-state voltage, decrease Kd. Tag **AVR_FCR_Ki** stores this parameter in the Unscheduled Write table.

Derivative Gain Kd. Sets the derivative gain. To improve the transient response to a step change, increase Kd. If there is too much jitter in the steady-state voltage, decrease Kd. Tag **AVR_FCR_Kd** stores this parameter in the Unscheduled Write table.

Time Constant Td. Filtering time constant Td is used to remove the noise effect on the numerical differentiation. Tag **AVR_FCR_Td** in the Unscheduled Write table stores this parameter, expressed in seconds.

FCR Overall Gain Kg. Sets the overall gain of the voltage regulator in FCR mode. It determines the characteristic of the dynamic response to a change in the DECS-250 output current. Tag **FCR_Kg** stores this parameter in the Unscheduled Write table.

AVR Overall Gain Kg. Sets the overall gain of the voltage regulator in AVR mode. It determines the characteristic of the dynamic response to a change in the generator voltage. Tag **AVR_Kg** stores this parameter in the Unscheduled Write table.

Voltage Matching Gain. This parameter is not used and should be set at zero. Tag **V_Match_Gain** stores this parameter in the Unscheduled Write table.

Power Factor Control

The Power Factor Control gains determine the response of the power factor control loop for the voltage regulation function when operating in power factor mode. These setting can be adjusted during system startup.

More information about tuning the power factor control gains is provided in the *Startup* chapter.

Integral Gain Ki. Sets the integral gain. Generally, if the time to reach steady state is too long, increase Ki. Tag **PF_Ki** stores this parameter in the Unscheduled Write table.

Overall Gain Kg. Sets the overall gain which determines the characteristic of the dynamic response to changes in power factor. If the transient response has too much overshoot, decrease Kg. if the transient response is too slow, with little or no overshoot, increase Kg. Tag **PF_Kg** stores this parameter in the Unscheduled Write table.

Var Control

The var control gains determine the response of the var control loop for the voltage regulation function when operating in var mode. These settings can be adjusted during system startup.

More information about tuning the var control gains is provided in the *Startup* chapter.

Integral Gain Ki. Sets the integral gain. Generally, if the time to reach steady state is too long, increase Ki. Tag **VAR_Ki** stores this parameter in the Unscheduled Write table.

Overall Gain Kg. sets the overall gain which determines the characteristic of the dynamic response to changes in vars. If the transient response has too much overshoot, decrease Kg. if the transient response is too slow with little or no overshoot, increase Kg. Tag **VAR_Kg** stores this parameter in the Unscheduled Write table.

Overexcitation Limiting

The OEL gains determine the response of the OIL control loop for the voltage regulation function when OEL is active. These settings can be adjusted during system startup.

More information about tuning the OEL control gains is provided in the *Startup* chapter.

Integral Gain Ki. Sets the integral gain. If the time to reach steady state is too long, increase Ki. Tag **OEL_Ki** stores this parameter in the Unscheduled Write table.

Overall Gain Kg. sets the overall gain which determines the characteristic of the dynamic response when OEL is active. If the transient response has too much overshoot, decrease Kg. if the transient response is too slow with little or no overshoot, increase Kg. Tag **OEL_Kg** stores this parameter in the Unscheduled Write table.

Underexcitation Limiting

The UEL gains determine the response of the UEL control loop for the voltage regulation function when UEL is active. These settings can be adjusted during system startup.

More information about tuning the UEL control gains is provided in the *Startup* chapter.

Integral Gain Ki. Sets the integral gain. If the time to reach steady state is too long, increase Ki. Tag **UEL_Ki** stores this parameter in the Unscheduled Write table.

Overall Gain Kg. sets the overall gain which determines the characteristic of the dynamic response when UEL is active. If the transient response has too much overshoot, decrease Kg. if the transient response is too slow with little or no overshoot, increase Kg. Tag **UEL_Kg** stores this parameter in the Unscheduled Write table.

Other Gains

The remaining three gains are stored in the Configuration table and can be written to the DECS-250 only when excitation is disabled. Refer to the *Software Interface* chapter for more information.

AVR/FCR Control Auxiliary Gain. Sets the influence of the auxiliary input on the AVR/FCR operating setpoint. Units are expressed as percent of rated generator voltage or excitation field current, as applicable, per auxiliary input volt. Tag **AVR_FCRAuxGain** stores this parameter in the Configuration table.

PF/Var Auxiliary Gain. Sets the influence of the auxiliary input on the var/PF operating setpoint. Units are expressed as percent of the rated generator kVA. For PF control the units are 0.01 PF per volt. A setting of 5 results in the regulated power factor being changed by 0.05 for each volt applied to the auxiliary input. Tag **PF_VARAuxGain** stores this parameter in the Configuration table.

Cross-Current Gain. Sets the gain of the cross-current input. The measured cross-current value is multiplied by this setting. This setting determines the change in voltage setpoint expressed in percent of rated voltage for a change in kvars equal to the rated generator kVA. This parameter adjusts the characteristic of var sharing between machines connected in the cross-current compensation method of var sharing. For example, a setting of 5 results in the voltage setpoint being changed by 5% of rated

voltage for a change in kvar equal to the rated kVA. Tag **CrossCurrentGain** stores this parameter in the Configuration table.

Tracking Tab

The Tracking tab is used to configure DECS-250 internal and redundant tracking parameters. Enter the internal tracking, redundant tracking, and traverse rates in the appropriate fields of the Tracking tab.

Tracking tab settings are shown in Figure 4-14 and described as follows.

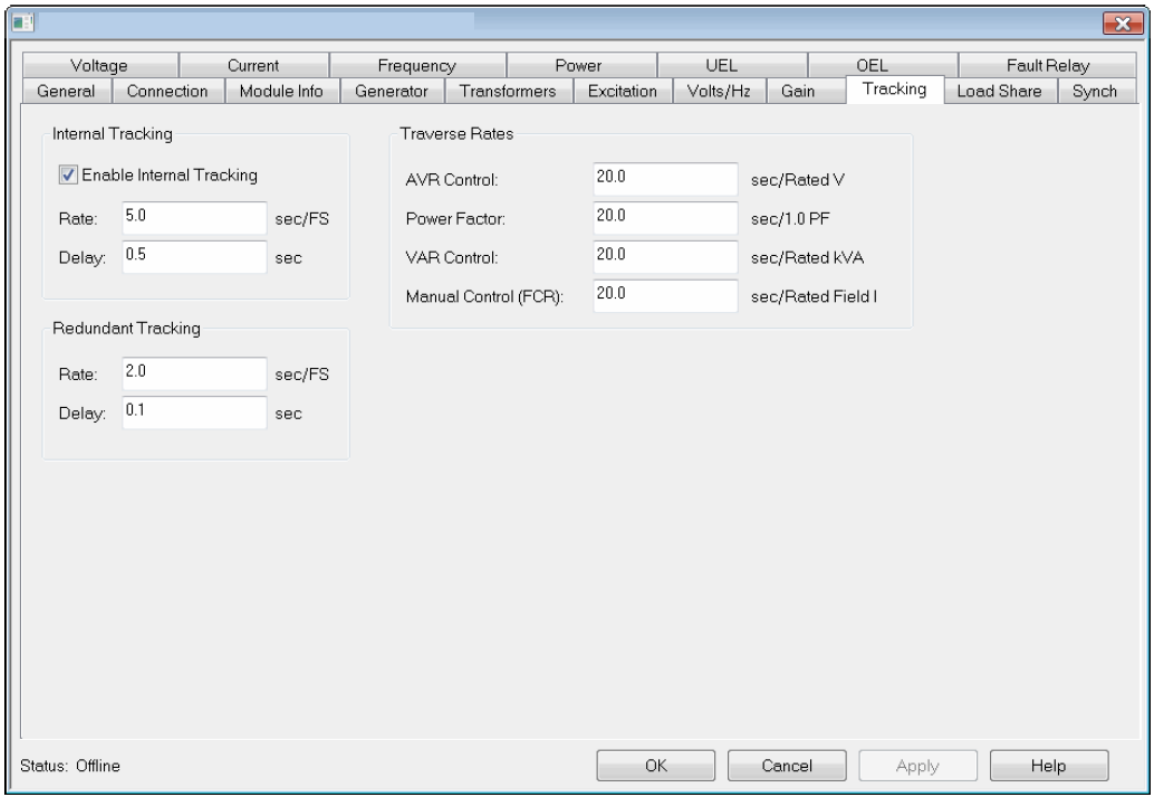

Figure 4-14. Tracking Tab Settings

Internal Tracking

Enable Internal Tracking. Ticking this checkbox sets Boolean tag **Internal_Tracking_En** in the Configuration data table. When the value of this tag is 1, internal tracking between voltage regulation modes is enabled and the Traverse Rates are enabled. If the tag value is 0, both the Traverse Rates and tracking between regulation modes is disabled.

Internal Tracking Rate. This setting changes the rate at which the internal tracking function matches the non-active excitation control modes to the active excitation control mode. This sets the value, expressed as seconds, of tag **InternalTrackRate** in the Configuration table. Its purpose is to reduce the likelihood that the short-term response of the active regulating mode to an upset is transferred to the new operating mode. Conversely, if the tracking delay is set too long, there is a risk of an old operating point being transferred to the new operating mode, resulting in an undesirable bump.

An example of how these parameters affect tracing is shown in Figure 4-15. In this example, a loss of sensing causes a full-scale regulator output. The internal tracking delay permits FCR mode to begin operation at the output level prior to the loss of sensing.

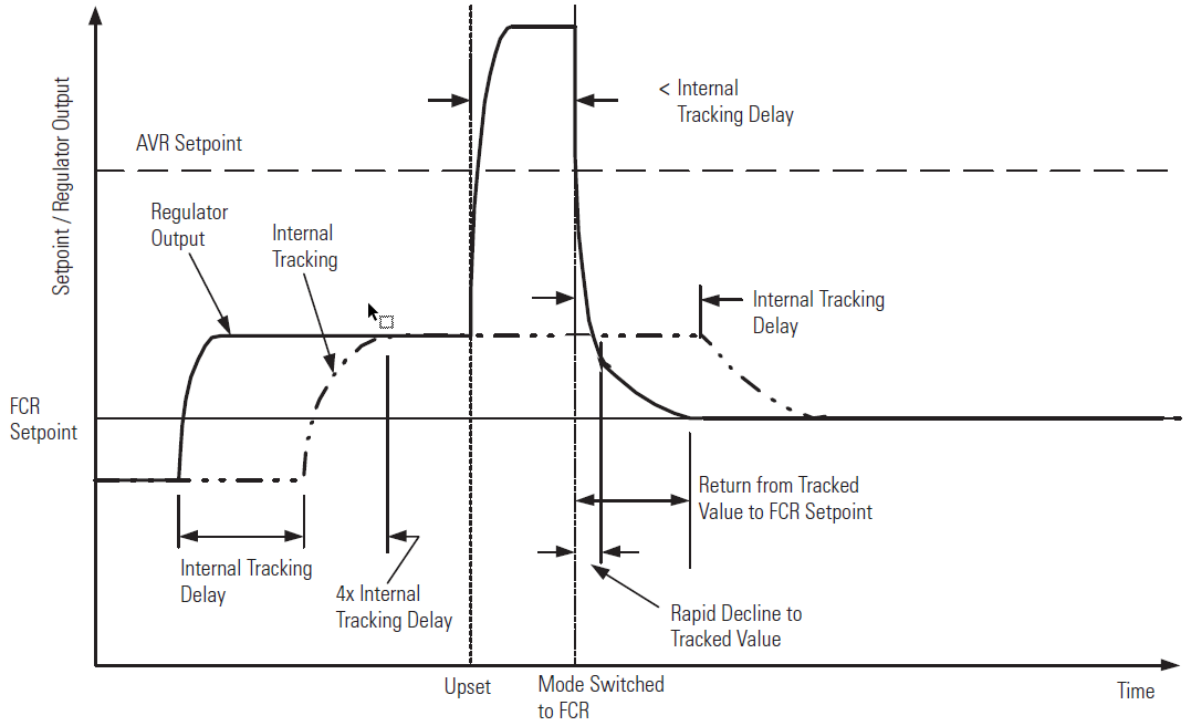

Figure 4-15. Internal Tracking Example

Increasing the internal tracking rate makes the tracking function less responsive to changes in the regulator output by reducing the slope of the tracking function. Increasing the tacking delay offsets the tracking response to the right in Figure 4-15. In this example, if the internal tracking delay were reduced, it is likely that the FCR mode setpoint has started at full regulator output, and recovery to the desired operation has been delayed.

Redundant Tracking

The redundant tracking function performs in a similar manner to internal tracking. Increasing the redundant tracking rate makes the tracking function less responsive to changes in the regulation output by reducing the slope of the tracking function. Increasing the tracking delay offsets the tracking response to the right in Figure 4-15.

Note
Redundant tracking is enabled whenever two DECS-250 controllers are configured in redundant mode and both controllers are operational. Redundant tracking parameters have no effect on a DECS-250 that is not part of a redundant pair.

Redundant Tracking Rate. This setting adjusts the rate at which the tracking function of the redundant DECS-250 matches its operating point to that of the active DECS-250. This parameter is expressed in seconds per full-scale excursion of the regulator output from zero to the rated generator field current. Tag **RedndtTrackRate** stores this parameter in the Configuration table.

Redundant Tracking Delay. This setting, expressed in seconds, adjusts the delay in the redundant tracking function. This sets the value of the **RedndtTrackDelay** tag in the Configuration table. Its purpose is to reduce the likelihood that the short-term response of the active DECS-250's regulating mode to an upset will be transferred to the backup DECS-250 when it becomes primary.

Traverse Rates

These parameters adjust how fast the regulator changes its operating point from one setpoint, the tracking value, to another when changing regulator operating modes. In general, the lower the rate, the

faster the regulator operating point changes. A value of 200 places the regulator in Hold mode and prevents the field current from changing when the regulation mode is changed. For more information, refer to the *Operation* chapter.

AVR Control Traverse Rate. Determines the time, measured in seconds, for the setpoint to move from zero to the rated generator voltage. It determines how fast the regulator changes the voltage setpoint from the tracking value to the operating setpoint when the regulator operating mode changes to AVR. This parameter is set as tag **AVR_Traverse_Rate** in the Configuration table.

Power Factor Traverse Rate. Determines the time, measured in seconds, for the PF setpoint to move from 0.50 lagging to 0.50 leading or vice versa. It determines how fast the regulator changes the power factor setpoint from the tracking value to the operating setpoint when the regulator operating mode changes to PF. This parameter is set as tag **PF_Traverse_Rate** in the Configuration table.

Var Control Traverse Rate. This parameter determines the time, measured in seconds, for the setpoint to move from zero to the rated generator kVA. It determines how fast the regulator changes the var setpoint from the tracking value to the operating setpoint when the regulator operating mode changes to var. this parameter is set as tag **VAR_Traverse_Rate** in the Configuration table.

Manual Control (FCR) Traverse Rate. This parameter determines the time, measured in seconds, for the setpoint to move from zero to the rated exciter current. It determines how fast the regulator changes the field current setpoint from the tracking value to the operating setpoint when the regulator operating mode changes to FCR. This parameter is set as tag **FCR_Traverse_Rate** in the Configuration table.

Figure 4-16 illustrates the function of internal tracking and traverse rates on a switch from var to PF operating modes.

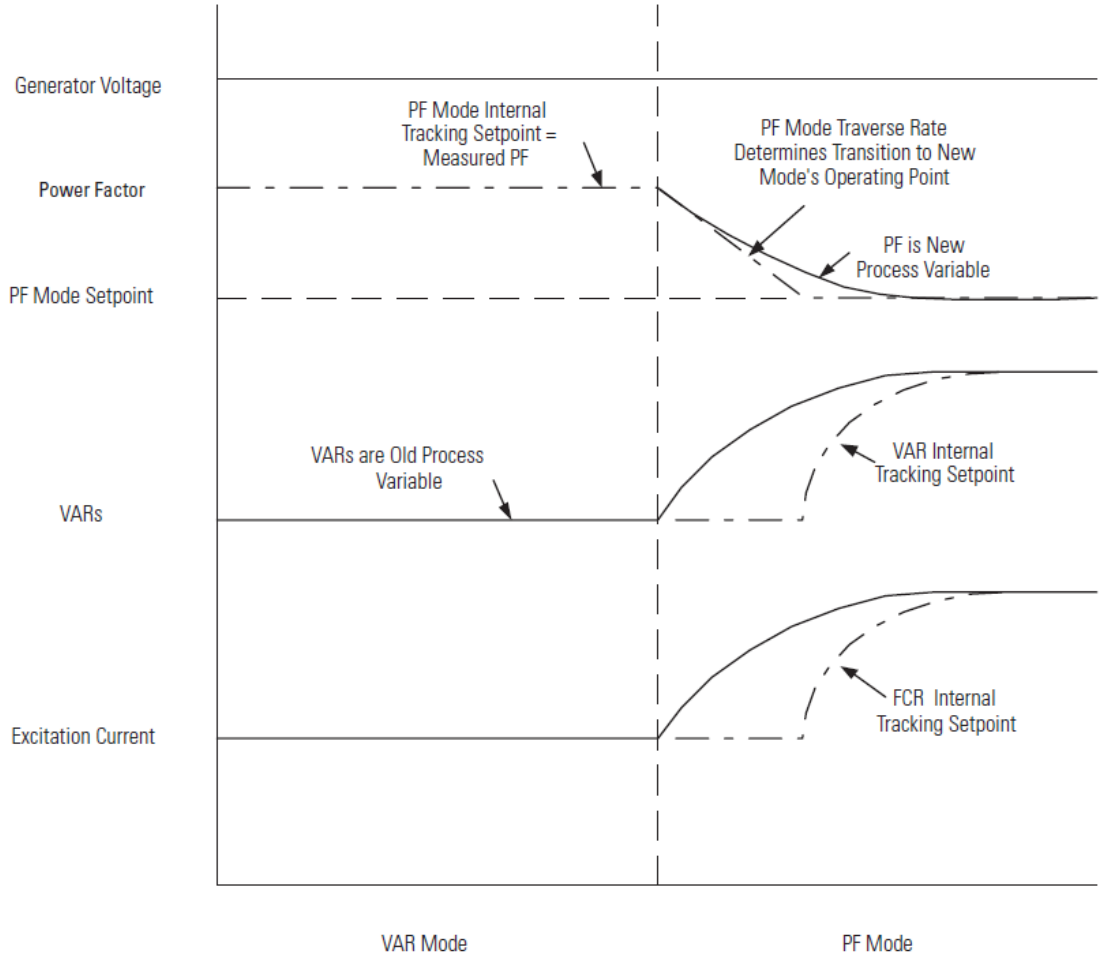

Figure 4-16. Internal Tracking and Traverse Rates Example

Synch Tab

The Synch tab is used to configure parameters related to the DECS-250 synchronizing function. Synch tab settings are illustrated in Figure 4-17 and described as follows.

Synchronization Limits

Frequency Match. Establishes the acceptance window for frequency matching, defined by Configuration table tags **SyncFreqLoLimit** and **SyncFreqHiLimit**. These tags are expressed in hertz and set by using the Lower Limit and Upper Limit fields in the Synch tab.

Voltage Match. Establishes the acceptance window for voltage matching, defined by Configuration table tags **SyncV_LoLimit** and **SyncV_HiLimit**. The voltage is considered matched if the voltage difference, expressed as a percentage of the bus voltage, falls within the percentage values entered in the LoLimit and HiLimit tage ((Vgen – Vbus)/Vbus × 100).

Phase Match. Establishes the acceptance window for phase matching as defined by Configuration table tags **SyncPhLoLimit** and **SyncPhHiLimit**. These tags are expressed in degrees and are set by using the Lower Limit and Upper Limit fields in the Sync tab.

Acceptance Delay. Establishes the time that all synchronizing parameters must be continuously within their respective acceptance window to permit closing the breaker. Configuration table tag **SynchAcceptDly** stores this value, expressed in seconds.

Bus A Offsets

Voltage Multiplier. Establishes a factor by which the Bus A voltage is scaled during synchronization. It can be used to compensate for transformer ration differences between the generator and bus voltages. For example, if the generator nominal voltage is 4,160 Vac and the nominal Bus A voltage is 12,480 Vac (each measured line-to-line), a voltage multiplier value of 0.333 permits voltage matching during synchronization. Configuration table tag **BusA_V_Scaler** stores this parameter.

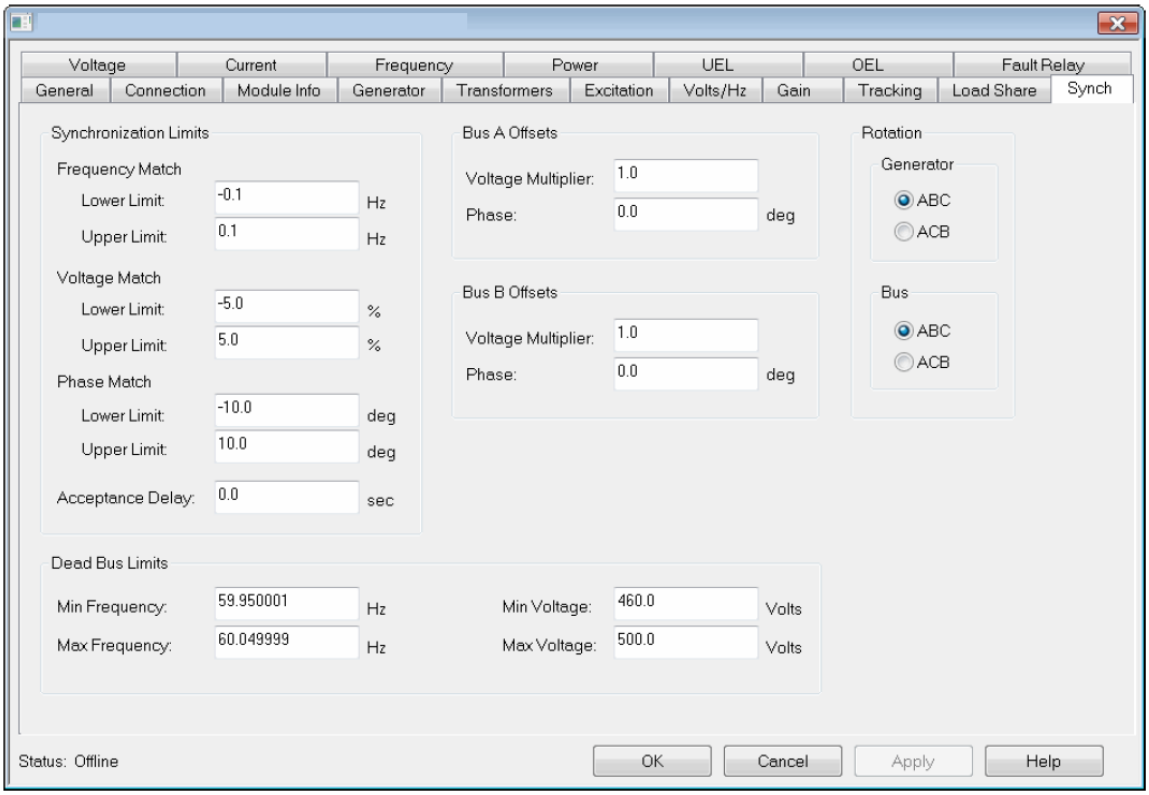

Figure 4-17. Synch Tab Settings

Phase. Establishes an offset angle added to the measured Bus A phase angle. It can be used to compensate for phase shift across transformers or between delta and wye connected systems.

When a generator with three-wire (delta) metering is synchronized to a bus with four-wire (wye) metering, set the phase offset to 30° to compensate for the 30° lag between the delta and wye systems. This parameter, expressed in degrees, is stored in Configuration table tag **BusA_PhOffset**.

Bus B Offsets

Voltage Multiplier. Establishes a factor by which the Bus B voltage is scaled during synchronization. It can be used to compensate for transformer ratio differences between the generator and bus voltages. Configuration table tag **BusB_V_Scaler** stores this parameter.

Phase. Establishes an offset angle added to the measured Bus B phase angle. It can be used to compensate for phase shift across transformers or between delta- and wye-connected systems. Configuration table tag **BusB_PhOffset** stores this parameter, expressed in degrees.

Table 4-3 provides a guide for adjusting phase offset for a variety of wiring configurations. Other wiring configurations are possible. It is the user's responsibility to determine and verify phase offset values for wiring configurations that are not depicted in this manual.

Table 4-3. Phase Offset Guide

Generator Connection	Bus Connection	Phase Shift Offset (in Synch Tab)
Single phase (line-to-line)	Dual beaker (line-to-neutral	–30
Single phase (line-to-line)	Four-wire wye	–30
Open delta	Dual breaker (line-to-neutral)	–30
Open delta	Four-wire wye	–30
Three-wire wye	Dual breaker (line-to-line)	0
Three-wire wye	Dual breaker (line-to-neutral)	–30
Three-wire wye	Four-wire wye	–30
Four-wire wye	Dual breaker (line-to-line)	+30
Four-wire wye	Single (connected line-to-line)	+30
Four-wire wye	Open delta	+30
Four-wire wye	Three-wire wye	+30

Dead Bus Limits

The dead bus limits define the acceptance windows for generator frequency and voltage used by the DECS-250 when closing the breaker into a dead bus.

The following Configuration tab settings specify the acceptance windows. These setting fields set the related tags in the Configuration table.

- *Min Frequency* – tag **DeadbusGenFreqLoLimit**, expressed in hertz
- *Max Frequency* – tag **DeadbusGenFreqHiLimit**
- *Min Voltage* – tag **DeadbusGenV_LoLimit**, expressed in volts
- *Max Voltage* – tag **DeadbusGenV_HiLimit**

Rotation

Generator. Specifies the generator phase rotation. Configuration table tag **GenRotABC_ACB_Select** stores this value. 0 = ABC, 1 = ACB.

Bus. Specifies the bus phase rotation. Configuration table tag **BusRotABC_ACB_Select** stores this value. 0 = ABC, 1 = ACB.

Load Share Tab

The Load Share tab is used to configure DECS-250 parameters related to the real power load sharing function. Load Share tab settings are illustrated in Figure 4-18 and described as follows.

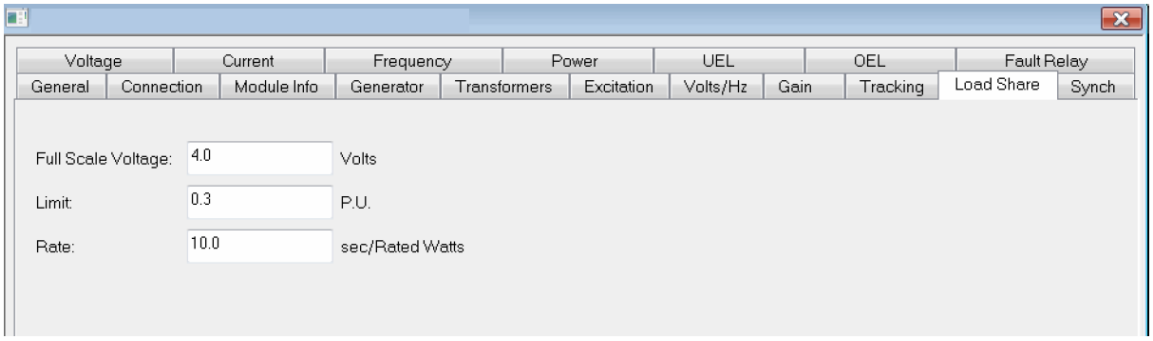

Figure 4-18. Load Share Tab Settings

Full Scale Voltage. Sets the load share output voltage when the generator is producing rated real power. This value, expressed in volts, is stored in the Configuration table as tag **LS_FS_V**.

Limit. Sets the maximum per unit load share error reported to the host controller. This value, expressed in per unit power, is stored in the Configuration table as tag **LSLimit**.

Rate. Sets the maximum change in the load share error per DECS-250 update cycle. This value, expressed in seconds per rated watts, is stored in the Configuration table as tag **LSRate**.

Voltage Tab

The Voltage tab is used to configure DECS-250 parameters related to the voltage protection and compensation functions. Voltage tab settings are illustrated in Figure 4-19 and described as follows.

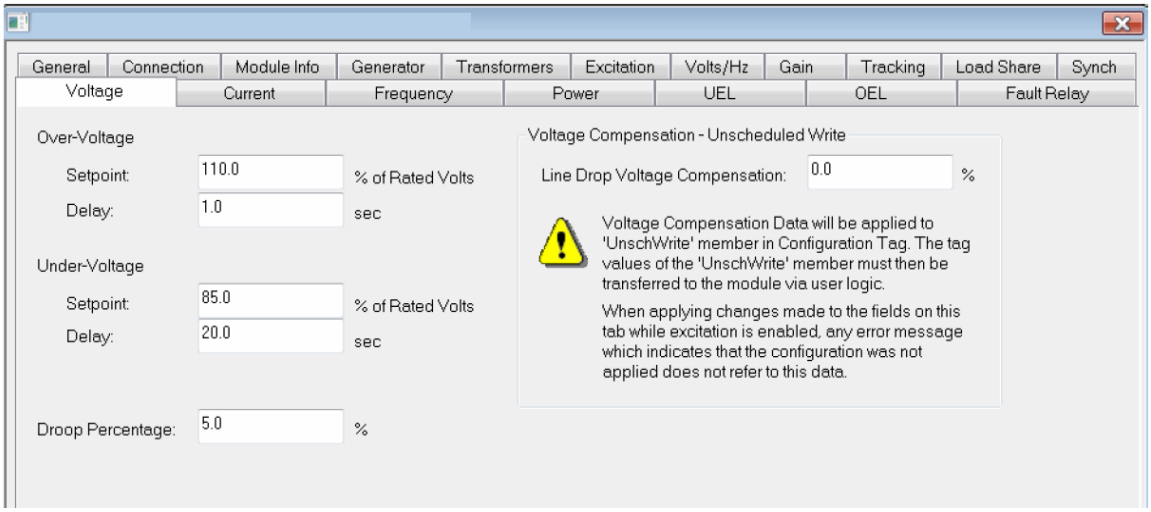

Figure 4-19. Voltage Tab Settings

Overvoltage

Setpoint. Establishes the overvoltage setpoint used by the DECS-250. This setting is scaled in percent of rated generator volts and stored in the Configuration table as tag **Ovr_V_Setpt**.

Delay. Establishes the time the generator voltage must be above the overvoltage setpoint before the DECS-250 annunciates an overvoltage fault. This setting, scaled in seconds, is stored in the Configuration table as tag **Ovr_V_TimeDly**.

Undervoltage

Setpoint. Establishes the undervoltage setpoint used by the DECS-250. This setting is scaled in percent rated generator volts and stored in the Configuration table as tag **Undr_V_Setpt**.

Delay. Establishes the time, in seconds, that the generator voltage must be below the undervoltage setpoint before the DECS-250 annunciates an undervoltage fault. This setting is stored as tag **Undr_V_TimeDly** in the Configuration table.

Compensation Settings

Droop Percentage. Establishes the voltage droop level at rated load when operating in Voltage Droop (reactive current compensation) mode. This setting determines the change in voltage setpoint expressed in percent of rated voltage. For example, a setting of 5 results in the voltage setpoint changing by 5% of rated voltage for a change in kvar equal to the rated kVA. This parameter is stored as tag **V_DroopSetpt** in the Configuration table.

Line Drop Voltage Compensation. Establishes the output voltage increase at rated current. This parameter is stored as tag **LineDropComp** in the Configuration table.

Related Parameters

Related parameters include:

- GenRated_V
- GenRated_I
- GenRated_W
- SoftStartTime
- EngineIdle

Current Tab

The Current tab is used to configure DECS-250 parameters related to overcurrent protection. Current tab settings are shown in Figure 4-20 and described as follows. Refer to the *Time Overcurrent Characteristic Curves* appendix for the available time-overcurrent protection curves and more information about setting overcurrent protection parameters in the Current tab.

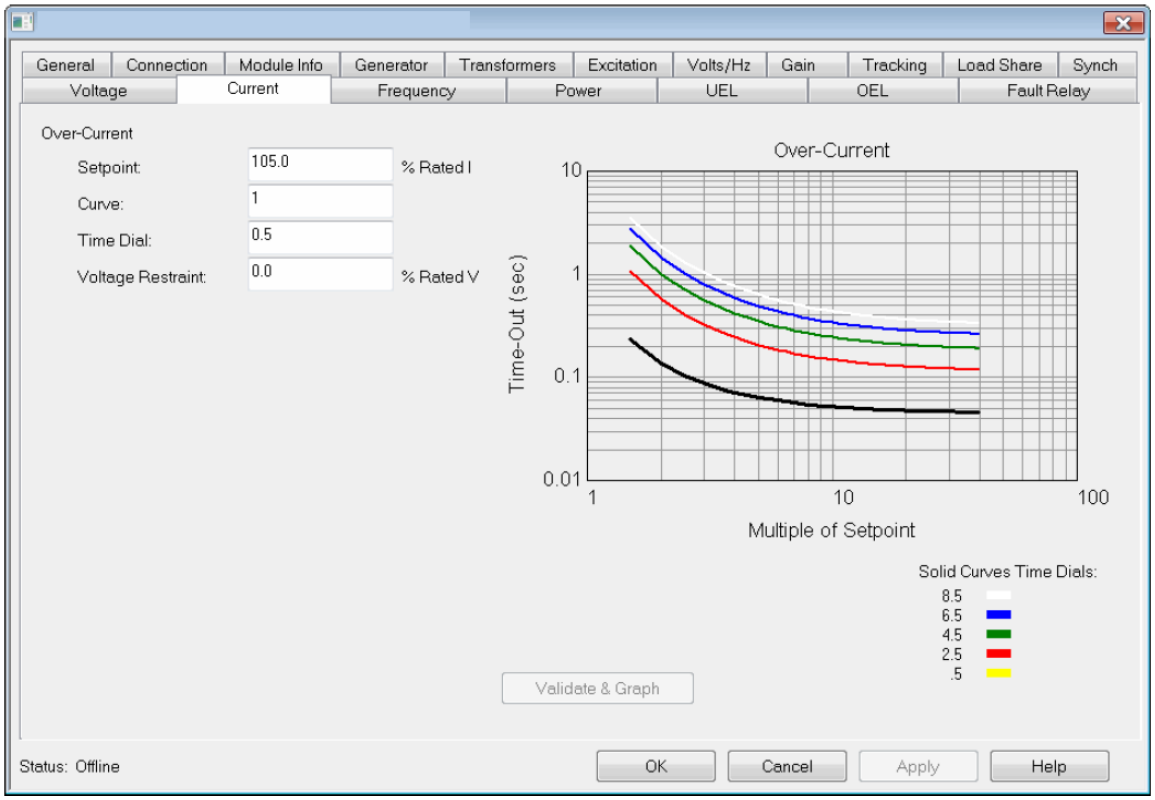

Figure 4-20. Current Tab Settings

Overcurrent

Setpoint. Establishes the overcurrent protection threshold. When the generator current exceeds this threshold, the DECS-250 starts timing toward a trip based on the selected overcurrent curve, voltage restraint setting, and time dial setting. This parameter, expressed in percent of rated generator current is stored in tag **TagOvr_I_Setpt**.

Overcurrent Curve. Selects the time overcurrent characteristic curve used by the DECS-250 overcurrent protection function. Tag **Ovr_I_Curve** stores this parameter.

Overcurrent Time Dial. Selects a particular curve from the family of curves contained in the selected overcurrent characteristic curve. Tag **Ovr_I_TimeDial** stores this parameter.

Overcurrent Voltage Restraint Setpoint. Establishes the generator voltage threshold below which the DECS-250 automatically reduces the selected time overcurrent setpoint. The overcurrent setpoint is reduced to the same percentage as the voltage restraint threshold. Tag **Ovr_I_VrestSetpt** stores this value, expressed as a percent of rated generator voltage.

Validate and Graph Button. Updates the graph shown on the Current tab to display the selected overcurrent characteristic curve. The specific curve selected by the overcurrent time dial setting is displayed in black.

Related Parameters

Related parameters include:

- GenRated_I
- GenRated_V

Frequency Tab

The Frequency tab is used to configure DECS-250 parameters related to overfrequency and underfrequency protection. Frequency tab settings are shown in Figure 4-21 and described as follows.

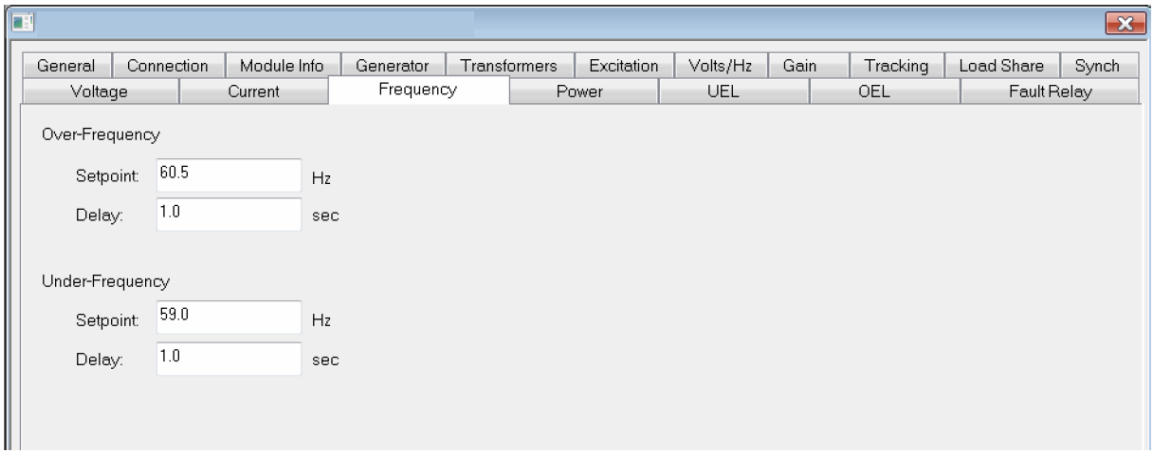

Figure 4-21. Frequency Tab Settings

Overfrequency Setpoint. Establishes the generator overfrequency protection setpoint. This setting, expressed in hertz, is stored as tag **OvrFrequSetpt** in the Configuration table.

Overfrequency Delay. Establishes the length of time, in seconds, that the frequency must be above the overfrequency setpoint before the DECS-250 annunciates the fault. This parameter is stored as tag **OvrFreqTimeDly** in the Configuration table.

Underfrequency Setpoint. Establishes the generator underfrequency protection setpoint. This setting, expressed in hertz, is stored as tag **UndrFreqSetpt** in the Configuration table.

Underfrequency Delay. Establishes the length of time, in seconds, that the frequency must be below the underfrequency setpoint before the DECS-250 annunciates the fault. This parameter is stored in the Configuration table as tag **UndrFreqTimeDly**.

Related Parameters

Related parameters include:

- EngineIdle
- SoftStartTime

Power Tab

The Power tab is used to configure DECS-250 parameters related to reverse power and reverse reactive power protection. A higher setpoint corresponds to larger reverse power or var flow before a fault is declared. Power tab settings are shown in Figure 4-22 and described as follows.

Reverse kW Setpoint. Establishes the generator reverse kW setpoint in percent of rated VA. Tag **Rev_kW_Setpt** stores this value in the Configuration table.

Reverse kW Fault Delay. Establishes the amount of time in seconds that the reverse kW must be above the reverse kW setpoint before the DECS-250 annunciates the fault. This parameter is stored as tag **Rev_kW_TimeDly** in the Configuration table.

Reverse kvar Setpoint. Establishes the generator reverse kvar setpoint in percent of rated VA. Tag **Rev_kVAR_Setpt** stores this value in the Configuration table.

Reverse kvar Fault Delay. Establishes the length of time, in seconds, that reverse kvar must be above the reverse kvar setpoint before the DECS-250 annunciates the fault. This parameter is stored in the Configuration table as tag **Rev_kVAR_TimeDly**.

Related Parameters

Related parameters include:

- GenRated_V
- GenRated_I

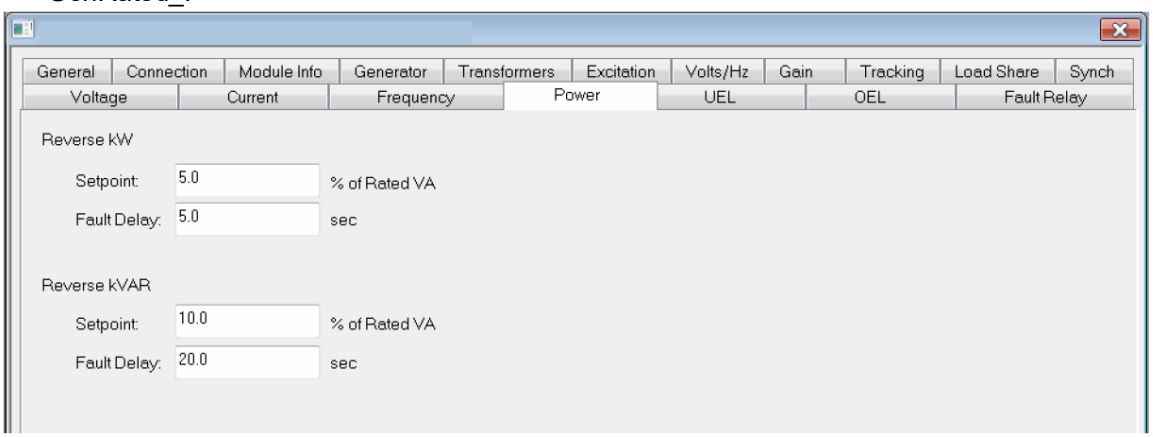

Figure 4-22. Power Tab Settings

Fault Relay Tab

The Fault Relay tab is used to configure DECS-250 parameters related to the fault relay output. Ticking a box enables the fault relay output to annunciate the corresponding fault. The fault relay operates when a selected fault occurs and the corresponding fault tag in the Output (Scheduled Write) Data table is set.

Fault Relay tab selections are shown in Figure 4-23.

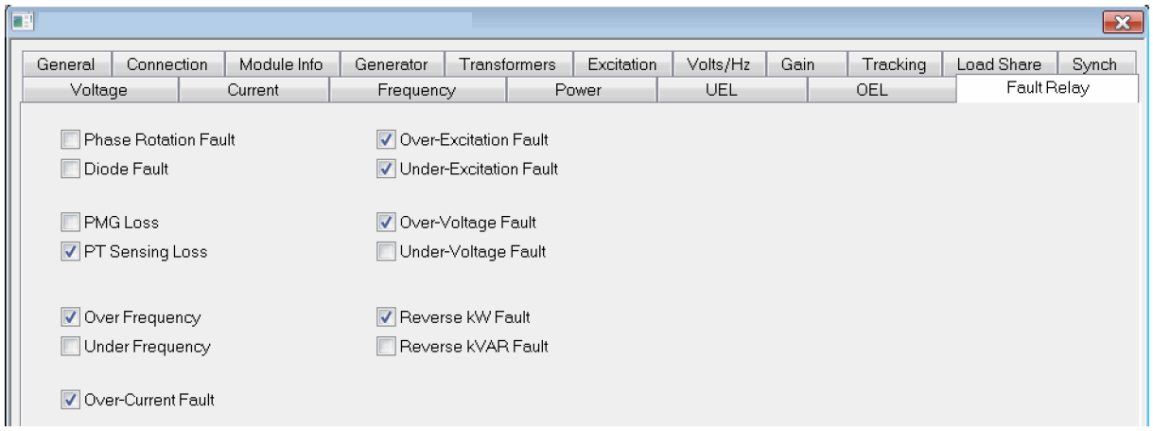

Figure 4-23. Fault Relay Tab Settings

Related Parameters

Related parameters include the fault output enable tags in the Output table.

5 • Startup

Introduction

This chapter provides a suggested procedure for commissioning a DECS-250 system. Before commissioning the DECS-250, you should:

- Evaluate the system design needs,
- Select a suitable instrument wiring arrangement,
- Follow recommended installation procedures,
- Configure the RSLogix 5000 software and program the host Logix controller,
- Configure the ControlNet network, and
- Perform the initial configuration of the DECS-250.

This procedure serves as a basic guide that can be adjusted to suit the needs of your particular application.

For additional information on how to perform specific steps, refer to the *Operation* chapter and the *Configuration* chapter. If errors are encountered during startup, refer to the *Troubleshooting chapter.*

Safety

Warning!

Avertissement!

Only qualified personnel can install, wire, and service the DECS-250 and its associated components. Before beginning any work, disconnect all sources of power and verify that they are de-energized and locked out. Failure to follow these instructions can result in personal injury or death, property damage, or economic loss.

Never open a current transformer (CT) secondary circuit with primary current applied. Wiring between the CTs and the DECS-250 must include a shorting terminal block in the CT secondary circuit. Shorting the secondary with primary current present enables you to remove other connections, if needed. An open CT secondary with primary current applied produces a hazardous voltage, which can lead to personal injury, death, property damage, or economic loss.

Seul un personnel qualifié peut installer, câbler et entretenir le DECS-250 et ses composants associés. Avant de commencer tout travail, débranchez toutes les sources d'alimentation et vérifiez qu'elles sont hors tension et verrouillées. Le non-respect de ces instructions peut entraîner des blessures ou la mort, des dommages matériels ou des pertes économiques.

N'ouvrez jamais un circuit secondaire de transformateur de courant (TC) avec un courant primaire appliqué. Le câblage entre les TC et le DECS-250 doit inclure un bornier de court-circuit dans le circuit secondaire du TC. Court-circuiter le secondaire avec le courant primaire présent vous permet de supprimer d'autres connexions, si nécessaire. Un secondaire de TC ouvert avec un courant primaire appliqué produit une tension dangereuse, qui peut entraîner des blessures, la mort, des dommages matériels ou des pertes économiques.

Caution
Mise en garde

Electrostatic discharge can damage integrated circuits or semiconductors. Follow these guidelines when you handle the DECS-250.

- Touch a grounded object to discharge static potential,
- Wear an approved wrist-strap-grounding device,
- Do not open the DECS-250 or attempt to service internal components,
- If available, use a static-safe workstation, and
- When not in use, keep the DECS-250 in its original shipping carton.

Les décharges électrostatiques peuvent endommager les circuits intégrés ou les semi-conducteurs. Suivez ces directives lorsque vous manipulez le DECS-250.

- Touchez un objet mis à la terre pour décharger le potentiel statique,
- Portez un bracelet de mise à la terre approuvé,
- N'ouvrez pas le DECS-250 et n'essayez pas de réparer les composants internes,
- Si disponible, utilisez un poste de travail antistatique et
- Lorsqu'il n'est pas utilisé, conservez le DECS-250 dans son emballage d'origine.

Recommended Equipment

The following equipment is needed for DECS-250 startup.

Programming Terminal

A suitable programming terminal (typically a laptop personal computer) with RSLinx, RSLogix 5000, and RSNetWorx for ControlNet software is required. The programming terminal must be equipped with a suitable interface to support communication with the Logix controller. A typical communication interface can be a ControlNet network interface card (Rockwell part number 1784-PCC) and its cable.

Two-Channel Chart Recorder

A two-channel recorder or other suitable recording method is recommended for the verification procedure. Chart recorder connections vary depending on the test being performed.

Test Current and Voltage Source

An appropriately calibrated three-phase voltage and three-phase current source is recommended to simulate generator and system power conditions at know operating points of interest. These can be connected to the DECS-250 VT and CT inputs in place of system VT and CT instruments.

Recommended Startup Procedure

Perform the static and dynamic tests described below.

When commissioning a redundant DECS-250 system, perform the recommended startup procedures on each DECS-250. Remove control power from the other DECS-250 prior to performing startup procedures.

Initial Checkout

1. Inspect the physical installation of the DECS-250 and the associated hardware.
2. Inspect all related DECS-250 wiring interconnections.
3. Verify that ground wiring is correctly installed and that CT wiring has been correctly installed by using user-supplied shorting terminal blocks or test switches.
4. Verify that all safety related measures have been taken. These measures include locking and tagging out power interconnections and prime mover capability.

Apply power to the DECS-250

1. Apply 24 Vdc control power to DECS-250 terminals BATT+ (47) AND BATT– (48).
2. Verify that following the DECS-250's power-up cycle, the ControlNet media status indicators flash and then become sold green.

Verify the ControlNet Network Connection

1. Use the RSWho function of the RSLinux software to browse and confirm the DECS-250 is on the ControlNet network.
2. Use the RSLogix 5000 software to confirm that the DECS-250's connection status is good and that the communication logic (MSG instructions) is executing properly.
3. Verify that scheduled and unscheduled data communication is updating by viewing changing data in the controller tag database.

Statically Test DECS-250 System Redundancy Operation

The following steps apply only to DECS-250 controllers configured for redundant operation.

1. Connect a suitable load to the DECS-250 excitation output through the user-supplied redundancy relays.
2. Enable FCR mode operation with an FCR setpoint greater than the loss of field current setpoint.
3. Verify that only one DECS-250 is selected as the primary controller by observing the status of the **Spare1** tag in the Input table, the state of the primary DECS-250's redundancy relay output, and the exciter field output current.
4. Disable excitation on the primary DECS-250 by removing the hardware excitation enable input, clearing the software excitation enable tag, removing the ControlNet connections, or removing control power from the primary DECS-250.
5. Verify that the backup DECS-250 has assumed primary status by observing the status of its **Spare1** tag in the Input table, the state of its redundancy relay output, and the exciter field output current.

Simulate Generator and Bus Sensing Inputs and Verify Metered Parameters

1. Disconnect the generator VT, generator CT inputs, and bus VT inputs in a manner that allows you to verify as much of the system wiring as practical. Ideally, this is done at the VTs for voltage inputs and at the CT shorting blocks for the CT inputs (after suitably shorting the CTs).
2. Apply known signals to each of the VT and CT inputs by using the test current and voltage source. This can be performed one at at time or simultaneously, depending upon the source available.
3. Observe the scheduled and unscheduled data returned to the controller from the DECS-250 with the RSLogix 5000 software.
4. Verify that all metered values correctly reflect the simulated signal inputs. If errors are observed, make the necessary wiring or configuration corrections.

Static Tests of Protection Functions

The following tests can be performed to verify the applicable protection functions of the DECS-250. These tests can require the use of the test current and voltage source. Some tests may require application of a load on the DECS-250 exciter output. This load can be either the generator exciter field or a simulated load.

Loss of Excitation Current (40)

1. Connect a suitable load to the DECS-250 excitation output terminals (EXC+ [54] and EXC– [55]).
2. Adjust the loss of excitation current setpoint to a level that causes an alarm.
3. Enable excitation in FCR mode with an FCR setpoint that is lower than the loss of excitation current setpoint.
4. Confirm that a field loss alarm is annunciated following the expected delay by viewing the appropriate controller tag.
5. Reset the loss of excitation current setpoint to the desired value.

Field Overvoltage (59F)

1. Connect a suitable load to the DECS-250 excitation output terminals (EXC+ [54] and EXC– [55]).
2. Decrease the field overvoltage setpoint to a level that causes an alarm.
3. Enable excitation in FCR mode with an FCR setpoint that produces a field voltage that is higher than the field overvoltage setpoint.
4. Confirm that a field overvoltage alarm is annunciated following the expected delay.
5. Reset the field overvoltage setpoint to the desired value.

Generator Overvoltage (59)

1. Set the generator overvoltage setpoint to a level that causes an alarm.
2. Apply a simulated generator voltage using the test voltage source.
3. Adjust the simulated generator voltage to exceed the generator overvoltage setpoint.
4. Verify that a generator overvoltage alarm is annunciated following the expected time delay.
5. Reset the generator overvoltage protection setpoint to the desired value.

Generator Undervoltage (27)

1. Connect a suitable load to the DECS-250 excitation output terminals (EXC+ [54] and EXC– [55]).
2. Increase the generator undervoltage setpoint to a level that causes an alarm.
3. Enable excitation in FCR mode.
4. Clear the **EngineIdle** tag in the controller tag database.
5. Apply a simulated generator voltage using the test voltage source.
6. Adjust the simulated generator voltage below the generator undervoltage setpoint.
7. Verify that a generator under voltage alarm is annunciated following the expected time delay.
8. Reset the generator undervoltage protection setpoint to the desired value.

Loss of Sensing (60FL)

1. Connect a suitable load to the DECS-250 excitation output terminals (EXC+ [54] and EXC– [55]).
2. Enable excitation in FCR mode with an FCR setpoint greater than the loss of excitation setpoint.
3. Apply a simulated generator voltage using the test voltage source.
4. Adjust the AVR setpoint equal to the simulated generator average line-to-line voltage.

5. Transfer the DECS-250 operating mode from FCR to AVR.
6. Reduce one or more of the generator VT sensing inputs to less than 30% of the AVR setpoint.

Caution
Mise en garde

During this step, the excitation output increases to the overexcitation limiting setpoint (if configured) or the maximum output. Exercise caution so that no damage occurs to the DECS-250, exciter field, or simulated load.

Au cours de cette étape, la sortie d'excitation augmente jusqu'à la consigne de limitation de surexcitation (si configurée) ou la sortie maximale. Soyez prudent afin qu'aucun dommage ne se produise sur le DECS-250, le champ d'excitation ou la charge simulée.

7. Verify that a generator loss of sensing alarm is annunciated following the expected time delay.

Loss of PMG/Excitation Power

This fault is enabled only when PMG excitation is selected and excitation is enabled. If shunt excitation is selected, skip the following steps.

1. Verify that PMG excitation is selected and that PMG phase select is correctly configured for single- or three-phase.
2. Connect a suitable load to the DECS-250 excitation output terminals (EXC+ [54] and EXC– [55]).
3. Enable excitation in FCR mode with an FCR setpoint greater than the loss of excitation setpoint.
4. Remove one or more PMG supply leads to the DECS-250.
5. Verify that a loss of PMG alarm is annunciated following the expected time delay.

Reverse Vars (40Q)

1. Apply simulated generator voltage and current signals with the test voltage and current source.
2. Adjust the simulated reactive power until it exceeds the reverse var setting in the negative direction.
3. Verify that a generator reverse vars alarm is annunciated following the expected time delay.

Overfrequency (81O)

1. Apply a simulated generator voltage using the test voltage source.
2. Adjust the frequency of the simulated generator voltage until it exceeds the overfrequency protection setpoint.
3. Verify that a generator overfrequency alarm is annunciated following the expected time delay.

Underfrequency (81U)

1. Connect a suitable load to the DECS-250 excitation output terminals (EXC+ [54] and EXC– [55]).
2. Enable excitation in FCR mode.
3. Check the **EngineIdle** tag in the controller tag database.
4. Apply a simulated generator voltage using the test voltage source.
5. Adjust the frequency of the simulated generator voltage below the underfrequency protection setpoint.
6. Verify that a generator underfrequency alarm is annunciated following the expected time delay.

Reverse Power (32R)

1. Apply simulated generator voltage and current signals with the test voltage and current source.
2. Adjust the simulated real power until it exceeds the reverse power setting in the negative direction.
3. Confirm that a generator reverse kW alarm is annunciated following the expected time delay.

Exciter Diode Monitor

Test the exciter diode monitor after the generator is operating. See the exciter diode monitor setup procedure in the *Limiter Functions and Diode Monitor Verification* section.

Phase Rotation Fault (47)

1. Apply simulated generator voltage and current signals with the test voltage and current source, opposite to the configured phase rotation.
2. Adjust the simulated generator voltage to the rated generator voltage.
3. Verify that a phase rotation fault alarm is annunciated following the expected time delay.

Generator Overcurrent (51)

1. Apply simulated generator voltage and current signals with the test voltage and current source.
2. Adjust the simulated generator voltage to the rated generator voltage.
3. Adjust the current above the desired test trip time point on the selected overcurrent curve.
4. Verify that a generator overcurrent alarm is annunciated following the expected time delay.

   The time delay is a function of the curve, time dial selection, voltage restraint setting, and the applied generator voltage and current.
5. Repeat as desired to verify various points on the characteristic curve selected.

Restore All Permanent Connections

Following all static testing, reconnect all permanent connections that were temporarily removed. These connections can include VT and CT connections, excitation power connections, and exciter output connections.

Operational Testing of DECS-250 Functions

Operational tests can be performed to verify operation of the applicable DECS-250 functions. These tests are performed with the generator and prime mover fully functional. These tests should be performed in the order presented so that the conditions at the end of one step exist at the beginning of the next step.

During these tests, the response of the AVR and FCR operating modes can be determined by creating a step change in the voltage setpoint. Increasing and decreasing the voltage setpoint creates the step change. The typical change in setpoint is between 1% and 10%. Observe the resulting generator response, voltage overshoot, and settling time and adjust the gain settings to obtain the desired performance.

A typical test involves initiating a change in the generator output voltage and monitoring it with a chart recorder. If the observed transient response has too much overshoot, reduce the Kp value. If the overshoot is small but the response is too slow, increase the value of Kp. Increasing the Ki value decreases the time required to reach steady state. To improve the transient response to a step change, increase Kd. If there is too much jitter in the steady-state output, decrease Kd. Because all of these terms impact the characteristic response, it is necessary to balance all three to obtain the desired generator response.

Start the Generator

1. Take the appropriate measures to allow rotation of the prime mover and generator without applying excitation.

2. Disable the excitation enable input of the DECS-250.
3. Start and accelerate the prime mover to synchronous speed.

Verify and Apply PMG Power

1. With the generator rotating at rated speed, measure the PMG voltage and compare it with the generator manufacturer's data to be sure that the PMG voltage is as expected.
2. Apply the PMG supply voltage at DECS-250 terminals PMG A (49), PMG B (50), and PMG C (51).

Verify and Adjust FCR Operation

1. Select the FCR mode of operation.
2. Set the FCR setpoint to the generator manufacturer's specified no-load exciter field current.
3. Enable the DECS-250's excitation output.
4. Monitor the generator exciter field current, exciter field voltage, and generator voltage.
5. Verify that the configured soft start occurs and the generator voltage increases to near the specified rated output voltage.
6. Adjust the FCR setpoint and verify that the metered field current responds as desired.
7. Adjust the gains as required to achieve the desired results.

Verify Metered Voltages and Phase Rotation

1. Observe the reported phase rotation for the generator.
2. Confirm that the metered rotation matches the configured rotation and that no phase rotation fault exists.
3. Measure the voltage at the DECS-250 sensing voltage input terminals and verify that they are correct for the selected wiring configuration.
4. Verify that the phase, line, and average voltages reported in the DECS-250 controller tags are as expected for the selected configuration.

Verify and Adjust AVR Mode Operation

1. Adjust the AVR setpoint to the rated voltage of the generator.
2. Select Constant Voltage mode by disabling reactive compensation (droop).
3. Enable AVR mode and monitor the generator exciter field current and generator voltage.
4. Verify that the metered generator voltage is near the rated output voltage setpoint entered in step 1.
5. Adjust the AVR setpoint and verify that the metered voltage responds as desired.
6. Disable excitation and allow the generator terminal voltage to collapse.
7. With AVR mode still selected, enable excitation and verify that the configured soft start is performed and the generator terminal voltage increases to the AVR setpoint.

Verify DECS-250 Redundancy Operation

1. Determine which DECS-250 is the primary controller of the redundant pair by monitoring the Spare1 tag in the Input table.
2. Disable excitation on the primary DECS-250 by removing the hardware excitation enable input, clearing the software excitation enable tag, removing the ControlNet connection, or removing DECS-250 control power.
3. Verify that control transfers to the backup DECS-250 and that its status is now primary.

Test Synchronization

Synchronization testing is performed with external, independent metering equipment connected directly to the main leads at the circuit breaker. This test verifies that the DECS-250 properly synchronizes the generator with the reference bus.

Generator Breaker in Test Position

Perform the following steps to test synchronization with the generator breaker in the test position.

1. Verify that the generator main circuit breaker is in the test position, preventing the breaker from closing when the DECS-250 issues a close command.
2. Observe the generator and bus voltages, generator and bus frequencies, and phase synchronization by using independent metering equipment.
3. Initiate synchronization by the DECS-250.
4. Confirm that the DECS-250 reports appropriate error signals and issues a close command when appropriate as indicated by independent metering equipment.

Generator Breaker in Normal Position

Perform the following steps to test synchronization with the generator breaker in the normal (enabled) position.

1. Place the generator main circuit breaker in the normal position, enabling the breaker to close when the DECS-250 issues a close command.
2. Select manual load control for the prime mover.
3. Select voltage droop mode for the DECS-250 and initiate synchronization.
4. Confirm that the DECS-250 reports appropriate error signals and issues a close command when appropriate.

Verify Applicable Automatic Operating Modes

Verification procedures are provided for the following operating modes.

- Droop (reactive current compensation)
- Cross-current (reactive differential) compensation
- Var control
- Power factor control
- Real power load sharing

Droop (Reactive Current Compensation)

Verify droop operation with the generator operating in parallel with a large power source that is maintaining constant voltage. You could also use one or more additional generators.

1. Adjust the prime mover to maintain constant real power.
2. Adjust the voltage setpoint with the DECS-250 in Voltage Droop mode.
3. Monitor the reactive power and verify that the measured reactive power changes by the expected amount.

   For example, if the droop setpoint is 5% and the voltage setpoint is changed by 1%, the expected change in reactive power is 20% of the rated kVA.

Cross-Current (Reactive Differential) Compensation

Perform this test with the generator operating in parallel with a large power source that is maintaining constant voltage. You could also use one or more additional generators.

1. Safely disconnect the cross-current loop with all paralleled machines. The cross-current CT for the generator under test must remain connected to its DECS-250.
2. Adjust the prime mover to produce a constant power of approximately 25% of rated output with the voltage control in AVR Droop mode.
3. Change the mode of operation to cross-current compensation.
4. Adjust the voltage setpoint and monitor the reactive power and verify that the measured reactive power changes by the expected amount.

   For example, if the cross-current compensation gain is 5% and the voltage setpoint is changed by 1%, the expected change in reactive power is 20% of rated kVA.
5. Repeat steps 1 through 4 on each machine.
6. Reconnect the cross-current loop.
7. Connect two or more machines in parallel (not connected to an infinite source) and apply a load.
8. Verify that the generator voltage does not decrease and the reactive power is shared among the machines.

Var Control

Test var control with the generator operating in parallel with a large power source that is maintaining constant voltage.

1. Place the voltage control in Droop mode.
2. Adjust the prime mover to produce a constant power of approximately 25% of rated output.
3. Verify that the var setpoint is adjusted to the produced vars.

   In the following step, be prepared to transfer back to AVR Droop mode if the excitation increases or decreases suddenly.
4. Transfer to Var Control mode.
5. Adjust the var level to 30% of the rated VA value.
6. Monitor the exciter field current and metered vars to determine performance during the following step.
7. Perform a 5% step of the var setpoint and observe the response of the automatic var control.
8. Adjust the gains as required to achieve the desired result and repeat the test as needed.

Power Factor

Test power factor (PF) control with the generator operating in parallel with a large power source that is maintaining constant voltage.

1. Place the voltage control in Droop mode.
2. Adjust the prime mover to produce a constant power of approximately 25% of rated output.
3. Verify that the PF setpoint is adjusted to the measured PF.

   In the following step, be prepared to transfer back to AVR Droop mode if the excitation increases or decreases suddenly.
4. Transfer to PF Control mode and monitor the exciter field current and metered PF to determine performance while performing the following step.
5. Perform a 0.10 step of the PF setpoint and observe the response of the automated PF control.

6. Adjust the gains as required to achieve the desired result and run the test again.

Real Power Load Sharing

Perform this test with two machines connected in parallel.

1. Place on prime mover in constant-speed control and the other in manual load control (typically droop).
2. Adjust the load to a reasonably balanced condition by adjusting the speed setpoint of the droop machine.
3. Enable the real power load sharing function on both machines.
4. Switch the droop machine to constant speed control and observe the real power and load share error reported from the DECS-250 on each machine.
5. Verify that the real power balances between the two generators as required and that the load share error from each DECS-250 approaches zero.
6. Adjust the load share rate and limit as required to provide stable load share operation.

Verify Limiter Operation

Volts per Hertz

Verify V/Hz limiter operation with the generator unloaded in Constant Speed mode and constant voltage AVR mode.

1. With the generator circuit breaker open, reduce the prime mover speed to just above the configured V/Hz upper knee frequency. Verify that the voltage remains constant.
2. Reduce the prime mover speed below the configured V/Hz upper knee frequency. Verify that the voltage decreases at the configured upper slope rate.
3. Reduce the prime mover speed below the configured V/Hz lower knee frequency. Verify that the voltage decreases at the configured lower slope rate.

Underexcitation

Verify UEL operation with the generator operating in parallel (droop or PF/var control) with a large power source that is maintaining constant voltage.

1. Disable the UEL function.
2. Set the online underexcitation limit for 5% vars into the generator.
3. Adjust the vars into the generator for 15% to 25% load to create an underexcited condition.
4. Enable the UEL function. This creates a step change into the underexcitation limit.
5. Observe the response of the excitation current reported by the DECS-250.
6. Adjust the UEL gains as required to obtain the desired stable response.
7. Verify stable performance of the UEL by testing the machine from 25% to 100% real power loading while underexcited.
8. Increase the excitation above the underexcitation limit.
9. Return the UEL settings to the values determined for the application.

Overexcitation

Verify OEL operation with the generator operating unloaded in Constant Speed mode and constant-voltage AVR mode.

1. Enable the OEL function.
2. Determine the field current required to reach 105% of the rated generator voltage.
3. Set the offline OEL high and low setpoints for a value equal to the field current determined in step 2.
4. Set the voltage setpoint to the rated generator voltage and enable excitation.
5. Set the voltage setpoint to 110% of the rated output.
6. Verify that the generator maximum voltage remains at approximately 105% and that the **OEL Active** tag is equal to 1.
7. Observe the response of the excitation current reported by the DECS-250.
8. Adjust the OEL gains as required to obtain the desired stable response.
9. Return the AVR setpoint to the rated output level.
10. Return the OEL settings to the values identified for the application.

Exciter Diode Monitor

Exciter diode monitor (EDM) testing can be performed in any generator operating mode.

1. Input the number of main poles and exciter poles.
2. Determine the normal percent ripple by observing the **ExcRipple** tag value.
3. Find the highest percent ripple while operating the generator and prime mover through the normal operating range.
4. Set the Open Diode Level threshold to a value that is three times the highest normal percent ripple found in step 3.

   The multiplier can be varied from 2 to 5 to adjust the trip margin. Reducing the multiplier may result in nuisance open diode annunciations.
5. Set the shorted diode level threshold to a value that is 50 times the highest normal percent of ripple found in step 3.

   The multiplier can be varied from 40 to 70 to adjust the trip margin. Regardless of the calculated value, the level has a maximum value of 70. Reducing the multiplier could result in nuisance shorted diode annunciations.
6. Set the EDM time delays as desired. Disable excitation and stop the prime mover.
7. Disconnect one exciter diode to create an open diode condition.
8. Start the prime mover, enable excitation and verify that the DECS-250 annunciates an open diode fault.
9. Disable excitation and shut down the prime mover. Reconnect the exciter diode disconnected in step 7.
10. Start the prime mover, enable excitation, and verify that the DECS-250 no longer annunciates an open diode fault.

Document the Configuration Parameters and Wiring Changes

When all tests have been performed and all adjustments are complete, us the *Configuration Record* appendix to document the installed configuration. Use the system design documentation to identify any required changes made to wiring related to the DECS-250.

6 • Software Interface

Introduction

This chapter provides information about DECS-250 communication over a ControlNet network. Scheduled and unscheduled messaging between a ControlLogix controller and the DECS-250 is discussed in addition to the user program communication interface.

Table 6-1 provides an overview of the module-defined data types that are created in the ControlLogix controller for a DECS-250. Other tables in this chapter display the content and format of the data types in greater detail.

Table 6-1. DECS-250 Data Table Summary

Data Table Name	Data Access *	Module-Defined Data Type	Assy. Instance	Size (Bytes)	Message Type †	Write Permitted with Excitation Enabled?
Input (Scheduled Read)	R	AB:1407_CGCM:I:0	2	76	S	N/A
Output (Scheduled Write)	W	AB:1407_CGCM:O:1	1	56	S	Y
Unscheduled Read	R	AB:1407_CGCM:Unscheduled_Read3	5	172	U	N/A
Unscheduled Write	W	AB:1407_CGCM:Unscheduled_Write3	6	76	U	Y
Configuration	R/W	AB:1407_CGCM:C:1	4	344	S (W) U (R)	N

* R = read, W = write
† S = scheduled, U = unscheduled

DECS-250 Firmware Revision Considerations

Controller tags are created when a DECS-250 is added to the ControlLogix controller project. The module-defined data type depends on the major firmware revision selected. If you need to change the major firmware revision in the ControlLogix project, you must delete the DECS-250 from the controller I/O configuration and install it again with the correct firmware revision selected.

In revision 3.x and later, the size of the Unscheduled Write data type was increased from 64 bytes to 76 bytes. If an unscheduled write with length of 76 bytes is attempted to a CGCM unit with firmware revision 2.x, the message returns an error due to the data size mismatch. Set the length of the unscheduled write message to 64 bytes for firmware revision 2.x and 76 bytes for revision 3.x and later.

Use the <CGCM>.C.UnschWrite controller tag as the source tag for the unscheduled write with either firmware revision (where <CGCM> is the name of the CGCM unit in the controller I/O configuration). The data in this tag is accessed by using the Gain and Voltage tabs in the module properties dialog box.

User Program Interface

The DECS-250 and the ControlLogix controller transfer data through five controller tags. The tag used is based on the module-defined data types listed in Table 6-1.

When the DECS-250 is added into an RSLogix 5000 software project, RSLogix 5000 software creates the five module-defined data types. In addition, four controller tags are created using these data types:

- **[CGCM_Modue_Name]:C**, the Configuration tag
- **[CGCM_Modue_Name]:C.UnschWrite**, the Unscheduled Write tag
- **[CGCM_Modue_Name]:O**, the Output or Scheduled Write tag

- **[CGCM_Modue_Name]:I**, the Input or Scheduled Read tag

When the Configuration tag is created, a set of default values are assigned. These default values do not always reflect the configuration parameters necessary for operation of your application.

Refer to the *Configuration* chapter for information about configuring the DECS-250 with the RSLogix 5000 software module configuration dialog boxes.

In addition to the module configuration interface, the data in the Configuration and Unscheduled Write tags can be accessed by reading and writing elements of the tags in the user program.

Note

RSLogix 5000 software performs data range checks on configuration data entered into the module configuration screens. This does not ensure that data is appropriate for the application. No data range checking is performed on configuration data that is modified by the user program. Out-of-range configuration data is not accepted by the DECS-250 and a communication error will result.

If you wish to monitor the content of the Unscheduled Read data type in the user program, you must create a tag with data type AB:1407_CGCM:Unscheduled_Read and create logic in the user program to initiate unscheduled read messages to the DECS-250.

Configuration Messaging

The DECS-250 is not configured when control power is applied. Use the ControlLogix controller to configure the DECS-250 before operation. There are two parts to module configuration and a two-step process that transfers the configuration into the DECS-250. The two parts of the configuration data include:

- *Configuration data table:* stores the DECS-250 configuration parameters. See the *Configuration Data Table* section for more information.
- *Unscheduled Write data table:* stores the voltage regulator gain and voltage compensation parameters. See the *Unscheduled Write Data Table* for more information.

The controller writes the Configuration data table to the DECS-250 automatically. The user program controls the write of the Unscheduled Write data. This two-step configuration process is described in the *Connection Behavior During Configuration* section.

Unscheduled Write Message Logic

The sample ladder diagram rung of Figure 6-1 provides an example of message control for writing the Unscheduled Write data table to the DECS-250.

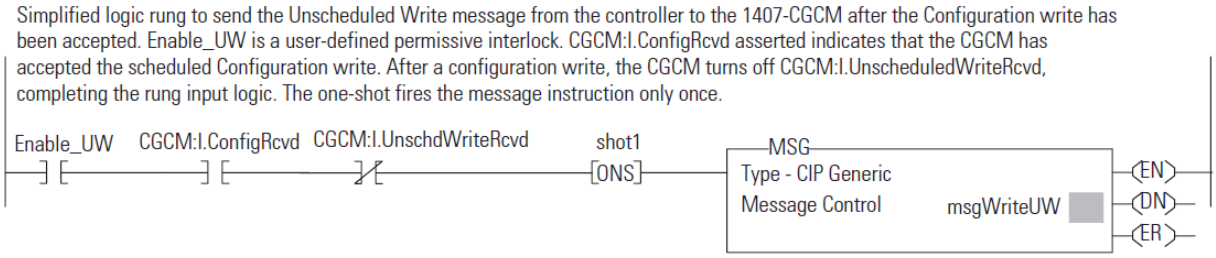

Figure 6-1. Unscheduled Write Message Logic Example

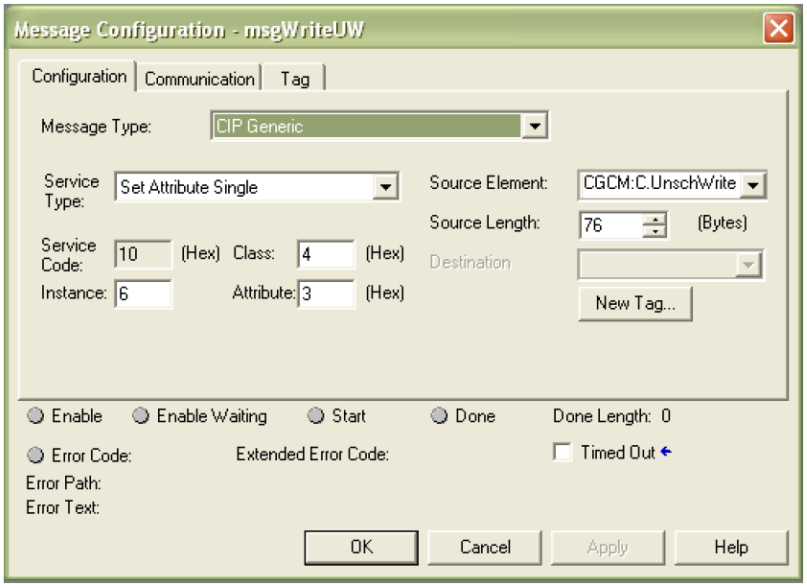

Figure 6-2. Message Configuration Settings

Note
The user is responsible for initiating all unscheduled messaging through the user program. Message length can be 64 bytes, which avoids writing the kWh, kvarh, and kVAh presets.

Connection Behavior During Configuration

The DECS-250 operates with an active Class 1 connection with a ControlLogix programmable controller that you programmed and configured. The Class 1 connection is made through the module profile. The DECS-250 controls the state of two bits in the Input data table to interact with the controller during configuration:

- *ConfigRcvd*: indicates that a valid Configuration write is accepted by the DECS-250.
- *UnschedWriteRcvd*: indicates that a valid Unscheduled Write message is accepted by the DECS-250.

Two types of connection-related services are involved in the configuration of the DECS-250:

- *Forward Open*: when a connection is first established. For instance, when the module profile is first configured or the DECS-250 is powered on, a Forward Open service is executed. The ConfigRcvd and UnschdWriteRcvd bits initial states are de-asserted. The controller writes the Configuration data table automatically and when the DECS-250 accepts this write, the ConfigRcvd bit is set. When the ConfigRcvd bit is set, the user program logic rung that controls the Unscheduled Write message is enabled. When the DECS-250 accepts the Unscheduled Write, the UnschdWriteRcvd bit is set.
- A Null Forward Open is executed when all these conditions are met:
    - A connection is already established,
    - A change to the Configuration or Unscheduled Write data tables is made in the module profile tabs, and
    - Apply or OK is clicked.

The controller attempts to write the Configuration automatically. If excitation is enabled, the configuration write is rejected. If excitation is not enabled, the DECS-250 accepts a valid configuration write. Regardless of excitation status, the DECS-250 de-asserts the UnschdWriteRcvd bit during the execution of a Null Forward Open. This action re-enables the user program logic rung that controls the Unscheduled Write message. When the DECS-250 accepts the Unscheduled Write, the UnschdWriteRcvd bit is set.

With the UnschdWriteRcvd bit asserted, the DECS-250 begins processing Scheduled Write (output) data and is ready for normal operation based on configuration and outputs received. The DECS-250 ignores any Scheduled Write (output) data if the UnschdWriteRcvd bit is not asserted.

Configuration Summary

These are the configuration changes made to the DECS-250:

- The DECS-250 accepts Configuration data only when excitation is disabled and all configuration data is in the correct range.
- The DECS-250 accepts Unscheduled Write data regardless of the excitation state provided that all Unscheduled Write data is in the correct range.

Operating Interfaces

In normal operation, the ControlLogix controller and the DECS-250 share operating data through scheduled and unscheduled ControlNet network messaging.

The overall functions and detailed content of the DECS-250 data tables are described in the next section.

Data Tables

The tables in this section show the content and organization of the DECS-250 data tables.

Terms

The following terms are used in the following tables:

- *Spare*: unused now, may be available for future use. If read, spares have a value of zero. If written, spare data is ignored by the DECS-250.
- *Reserved*: used internally by the DECS-250. If read, reserve data can be any value. If written, reserved data is ignored by the DECS-250.
- *Generator*: generator output point
- *Bus*: indicates the synchronizing reference point
- *Bus A*: indicates either a three-phase reference bus or the first single-phase reference bus
- *Bus B*: if used, the second single-phase reference bus

Abbreviations

Data table abbreviations for the assembly object table data names are listed in Table 6-2.

Table 6-2. Data Table Abbreviations

Abbreviation	Definition	Abbreviation	Definition
Ack	Acknowledge	Lo	Low
Aux	Auxiliary	LS	Load share
Avg	Average	Max	Maximum
AVR	Automatic voltage regulator	Med	Medium
Brkr	Breaker	Min	Minimum
CCC	Cross current compensation	OEL	Overexcitation limiting
CCCT	Cross current compensation transformer	Out	Output
Comp	Compensation	Ovr	Over
Config	Configuration	PF	Power factor
CT	Current transformer	Ph	Phase
Dly	Delay	PMG	Permanent magnet generator
En	Enable	Pri	Primary
Ened	Enabled	PU	Per unit
Err	Error	Pwr	Power
Exc	Excitation	Rcvd	Received

Abbreviation	Definition
FCR	Field current regulation
Flt	Fault
Freq	Frequency
FS	Full scale
Gen	Generator
Hi	High
Hrs	Hours
Hz	Hertz
I	Current
Init	Initial
k	Kilo
Kd	Derivative gain
Kg	Overall gain
Ki	Integral gain
Kp	Proportional gain
Lim	Limit

Abbreviation	Definition
Redndt	Redundant
Resvd	Reserved
Rev	Reverse
Rot	Rotation
Sec	Secondary
Setpt	Setpoint
Sync	Synchronization
Td	Derivative time constant
UEL	Underexcitation limiting
Undr	Under
Unschd	Unscheduled
V	Voltage
VA	Voltamperes
var	Voltamperes, reactive
VT (or PT)	Voltage transformer or potential transformer
W	Watt

Assembly Object Properties

The CIP Assembly Object (Class 0x04) provides assembly instances, attributes and services that facilitate data transfer between the DECS-250 and the ControlLogix controller. Specific assembly object properties are listed with each of the following data tables.

Input Data Table (Scheduled Read)

The Input data table contains time-critical status data read from the DECS-250 by the ControlLogix controller.

Data in this Controller Tag is automatically read by the host controller from the DECS-250 at the scheduled update rate whenever a connection between the two exists. This occurs independently of the user program. The Input data table can also be read by using unscheduled messaging.

Data Type

The Input data table is automatically created by using module-defined data type AB:1407_CGCM:I:0.

Assembly Object Instance 2 – Input Data Table (Scheduled Read)

The Get Attributes Single service for instance 1 of the Assembly Object can access the information listed in Table 6-3.

Table 6-3. Get Attributes Single (Service Code 0x0E)

Name	Attribute ID	Data Type	Value
Data	3	UINT	See Table 6-4.
Size	4	UINT	76

Configuration Checking

No range checking is performed on the Input data table.

Table 6-4. Scheduled Read Data Table

Byte	Size in Bytes	Type	Bits	Tag Name	Description-+	Units	Range
0	4	DINT	0 to 7	Status_32_bit	Connect Status		
4	1	Bool	0	RevVARFlt	Reverse kVAR Fault	-	0=Inactive

Byte	Size in Bytes	Type	Bits	Tag Name	Description-+	Units	Range
		Bool	1	RevPwrFlt	Reverse kW Fault		, 1=Active
		Bool	2	OvrExcFlt	Over-excitation Fault		
		Bool	3	Ovr_I_Flt	Over-current Fault		
		Bool	4	Undr_V_Flt	Under-voltage Fault		
		Bool	5	Ovr_V_Flt	Over-voltage Fault		
		Bool	6	UndrFreqFlt	Under-frequency Fault		
		Bool	7	OvrFreqFlt	Over-frequency Fault		
5	1	Bool	0	CGCM_Flt	CGCM Internal Fault	-	0=Inactive, 1=Active
		Bool	1	LossExcFlt	Loss of Excitation Current Fault		
		Bool	2	OEL_Active	Over-excitation Limiting Active		
		Bool	3	UEL_Active	Under-excitation Limiting Active		
		Bool	4	LossSensingFlt	VT Sensing Loss		
		Bool	5	LossPMGFlt	PMG Loss		
		Bool	6	RotDiodeFlt	Rotating Diode Fault		
		Bool	7	PhRotFlt	Phase Rotation Fault		
6	1	Bool	0	BusRot_ABC_ACB	Rotation Bus	-	0=ABC, 1=ACB
		Bool	1	GenRot_ABC_ACB	Rotation Generator		
		Bool	2	FltOut	Output Active Fault		0=Inactive, 1=Active
		Bool	3	ExcOut	Excitation Out Enabled		0=Disabled, 1=Enabled
		Bool	4	PF_VAR_Selection	Power Factor/VAR Selection		0=PF, 1=VAR
		Bool	5	PF_VAR_Control_Ened	Power Factor/VAR Control Enabled		0=Disabled, 1=Enabled
		Bool	6	AVR_FCR_Selection	AVR/FCR Control Selection		0=AVR, 1=FCR
		Bool	7	FLTResetAck	Reset Acknowledge Fault		0=No, 1=Yes
7	1	Bool	0	BusV_Present	Bus Voltage Present	-	0=False, 1=True
		Bool	1	GenV_Present	Generator Voltage Present		
		Bool	2	PhRotMatch	Phase Rotation Match		
		Bool	3	V_Match	Voltage Match		
		Bool	4	FreqMatch	Frequency Match		
		Bool	5	PhMatch	Phase Match		
		Bool	6	CGCMInControl	CGCM Control		0=No, 1=Yes
		Bool	7	Spare1	CGCM is active in a redundant pair		0=False, 1=True
8	1	Bool	0	Activebus_A_B	Bus A/B Active	-	0=Bus A, 1=Bus B
		Bool	1	Raise_V	Raise Voltage		0=False, 1=True
		Bool	2	Lower_V	Lower Voltage		
		Bool	3	Raise_Freq	Raise Frequency		
		Bool	4	Lower_Freq	Lower Frequency		
		Bool	5	Raise_Ph	Raise Phase		

Byte	Size in Bytes	Type	Bits	Tag Name	Description-+	Units	Range
		Bool	6	Lower_Ph	Lower Phase		
		Bool	7	SyncFailure	Synchronization Failure		
9	1	Bool	0	AutoSync	Auto Synchronization Enabled	-	0=Disabled, 1=Enabled
		Bool	1	CheckSync	Check Synchronization Enabled		
		Bool	2	PermissiveSync	Permissive Synchronization Enabled		
		Bool	3	UndefinedSyncMode	Undefined Synchronization Mode		0=No, 1=Yes
		Bool	4	SyncModeConflict	Synchronization Mode Conflict		
		Bool	5	SyncDeadBus	Dead Bus Synchronization		
		Bool	6	CloseBusA_Brkr	Close Bus A Breaker		0=Don't Close, 1=Close
		Bool	7	CloseBusB_Brkr	Close Bus B Breaker		
10	1	Bool	0	Spare2	Indicates when the excitation output short circuit protection is active.	-	0 = Inactive 1 = Active
		Bool	1	FreqLessThan10Hz	Frequency Less Than 10 Hz		0=False, 1=True
		Bool	2	Spare3			
		Bool	3	SetptTraverseActive	Traverse Setpoint Active		0=Setpoint, 1=Traverse
		Bool	4	ShortedRotDiodeFlt	Rotating Diode Shorted Fault		0=Inactive, 1=Active
		Bool	5	OpenRotDiodeFlt	Rotating Diode Open Fault		
		Bool	6	HardwareExcEned	Hardware Excitation Enabled		0=Disabled, 1=Enabled
		Bool	7	SoftwareExcEned	Software Excitation Enabled		
11	1	Bool	0	ConfigRcvd	Configuration Received	-	0=False 1=True
		Bool	1	UnschdWriteRcvd	Unscheduled Write Received		
		Bool	2	Spare6			
		Bool	3	Spare7			
		Bool	4	Spare8			
		Bool	5	kVAR_LS_Active	kVAR Load Share Active		0=Inactive 1=Active
		Bool	6	Spare9			
		Bool	7	kW_LS_Active	kW Load Share Active		0=Inactive 1=Active
12	4	Real	N/A	Total_kW	Total kW	kW	-3E+09 to 3E+09
16	4	Real	N/A	LS_Err	Load Share Error	%	
20	4	Real	N/A	kW_LS_Input_V	kW Load Share Input Voltage	Volts	
24	4	Real	N/A	kW_PU_Load	kW Load Per Unit	-	0 to 5
28	4	Real	N/A	kW_AnalogPU_Load	kW Analog Value Per Unit	-	0 to 1
32	4	Real	N/A	kVAR_LS_InputV	kVAR Load Share Input	Volts	0 to 1

Byte	Size in Bytes	Type	Bits	Tag Name	Description-+	Units	Range
					Voltage		
36	4	Real	N/A	kVAR_PU_load	kVAR Load Per Unit	-	
40	4	Real	N/A	kVAR_AnalogPU_Load	kVAR Analog Value Per Unit	-	0 to 1
44	4	Real	N/A	AvgLLGenV	Average Generator LL Voltage	Volts	0 to 30,000
48	4	Real	N/A	V_MatchErr	Voltage Match Error	%V	–100 to 100
52	4	Real	N/A	FreqMatchErr	Frequency Match error	Hz	–90 to 90
56	4	Real	N/A	PhMatchErr	Phase Match Error	Deg	–180 to 180
60	4	Real	N/A	GenFreq	Generator Frequency	Hz	10 to 90
64	4	Real	N/A	BusFreq	Active Bus Frequency	Hz	10 to 90
68	4	Real	N/A	Spare10			
72	4	Real	N/A	Spare 11			

Output (Scheduled Write) Data Table

The Output data table contains time-critical command and setpoint data written to the DECS-250 by the ControlLogix controller.

Data in this Controller Tag is automatically written by the host controller to the DECS-250 at the scheduled update rate whenever a connection between the two exists. This occurs independently of the user program. The Output data table can also be read and written by using unscheduled messaging. An unscheduled write message is not accepted if there is a scheduled connection active.

Data Type

The Output data table is automatically created by using module-defined data type AB:1407_CGCM:O:1.

Assembly Object Instannce 1 – Output Data Table (Scheduled Write)

The Get Attributes Single service for instance 1 of the Assembly Object can access the information listed in Table 6-5.

Table 6-5. Get Attributes Single (Service Code 0x0E)

Name	Attribute ID	Data Type	Value
Data	3	UINT	See Table 6-7.
Size	4	UINT	56

The Set Attributes Single service for instance 1 of the Assembly Object can access the information listed in Table 6-6.

Table 6-6. Set Attributes Single (Service Code 0x10)

Name	Attribute ID	Data Type	Value
Data	3	UINT	See Table 6-7.

Note

Set Attribute Single is supported for this instance only when there is no scheduled connection to it. Otherwise, it returns the error CI_GRC_BAD_OBJ_MODE.

Configuration Checking

No range checking is performed on the Output data table.

Table 6-7. Output (Scheduled Write) Data Table, Assembly Instance 1

Byte	Size in Bytes	Type	Bits	Tag Name	Description	Units	Range
0	1	Bool	0	RevVARFltOutEn	Reverse VAR Fault Output Enable	-	0=Disabled, 1=Enabled
		Bool	1	RevPwrFltOutEn	Reverse Power Fault Output Enable		
		Bool	2	OvrExcFltOutEn	Over-excitation Fault Output Enable		
		Bool	3	Ovr_I_FltOutEn	Over-current Fault Output Enable		
		Bool	4	Undr_V_FltOutEn	Under-voltage Fault Output Enable		
		Bool	5	Ovr_V_FltOutEn	Over-voltage Fault Output Enable		
		Bool	6	UndrFreqFltOutEn	Under-frequency Fault Output Enable		
		Bool	7	OvrFreqFltOutEn	Over-frequency Fault Output Enable		
1	1	Bool	0	Spare1		-	-
		Bool	1	LossExcFltOutEn	Loss Excitation Fault Output Enable		0=Disabled, 1=Enabled
		Bool	2	OEL_En	Over-excitation Limiting Enable		
		Bool	3	UEL_En	Under-excitation Limiting Enable		
		Bool	4	LossSensingFltOutEn	Loss Sensing Fault Output Enable		
		Bool	5	LossPMGFLtOutEn	Loss Permanent Magnet Generator Fault Output Enable		
		Bool	6	RotDiodeFltOutEn	Rotation Diode Fault Output Enable		
		Bool	7	PhRotFltOutEn	Phase Rotation Fault Output Enable		
2	1	Bool	0	Spare2		-	-
		Bool	1	Spare3			
		Bool	2	EngineIdle	Engine Idle		0=False, 1=True
		Bool	3	Spare4			
		Bool	4	PF_VAR_Select	Power Factor/VAR Select		0=PF, 1=VAR
		Bool	5	PF_VAR_En	Power Factor/VAR Enable		0=Disabled, 1=Enabled
		Bool	6	AVR_FCR_Select	Automatic Voltage Regulator/Field Current Regulator Select		0=AVR, 1=FCR
		Bool	7	FltReset	Fault Reset		0=De-assert, 1=Assert
3	1	Bool	0	AutoSyncEn	Auto Synchronization Enable	-	0=Disabled, 1=Enabled
		Bool	1	CheckSyncEn	Check Synchronization Enable		
		Bool	2	PermissiveSyncEn	Permissive Synchronization Enable		
		Bool	3	Spare5			

Byte	Size in Bytes	Type	Bits	Tag Name	Description	Units	Range
		Bool	4	Spare6			
		Bool	5	Bus A_B_Select	Bus A/B Select		0=Bus A, 1=Bus B
		Bool	6	DeadBusClosureEn	Dead Bus Closure Enable		0=Disabled, 1=Enabled
		Bool	7	InitiateSync	Initiate Synchronization		0=Inactive, 1=Active
4	1	Bool	0	Clear_kW_Hrs (Rev. 2.*x*) Set_kW_Hrs (Rev. 3.*x* or later)	Set/Clear kW Hours		0=De-assert, 1=Assert
		Bool	1	Clear_kVAR_Hrs (Rev. 2.*x*) Set_kVAR_Hrs (Rev. 3.*x* or later)	Set/Clear kVAR Hours		
		Bool	2	Clear_kVA_Hrs (Rev. 2.*x*) Set_kVA_Hrs (Rev. 3.*x* or later)	Set/Clear kVA Hours		
		Bool	3	Spare7			
		Bool	4	Droop_CCC_Select	Droop/Cross Current Compensation Select		0=Droop, 1=CCC
		Bool	5	V_DroopEn	Voltage Droop Enable		0=Disabled, 1=Enabled
		Bool	6	Spare8			
		Bool	7	SoftwareExcEn	Software Excitation Enable		0=Disabled, 1=Enabled
5	1	Bool	0	Spare9		-	-
		Bool	1	Spare10			
		Bool	2	Spare11			
		Bool	3	Spare12			
		Bool	4	kVAR_LS_BridgeEn	kVAR Load Share Bridge Enable		0=Disabled, 1=Enabled
		Bool	5	kVAR_LS_En	kVAR Load Share Enable		
		Bool	6	kW_LS_BridgeEn	kW Load Share Bridge Enable		
		Bool	7	kW_LS_En	kW Load Share Enable		
6	1	Bool	0 to 7	Spare13_20		-	-
7	1	Bool	0 to 7	Spare21_28		-	-
8	4	Real	N/A	AVRSetpt	Automatic Voltage Regulator Setpoint	Volts	85 to 30,000
12	4	Real	N/A	FCRSetpt	Field Current Regulator Setpoint	Adc	0 to 15
16	4	Real	N/A	PFSetpt	Power Factor Setpoint	PF	-0.5 to 0.5
20	4	Real	N/A	VARSetpt	VAR Setpoint	VARS	-1E+07 to 1E+07
24	4	Real	N/A	kWLSOutV	kW Load Share Output Voltage	Volts	
28	4	Real	N/A	kWAnalogTargetPUValue	kW Analog Target Value Per Unit	-	
32	4	Real	N/A	kWDigitalTargetPUValue	kW Digital Target Value Per Unit	-	
36	4	Real	N/A	kVAR_LS_OutV	kVAR Load Share Output Voltage	Volts	

Byte	Size in Bytes	Type	Bits	Tag Name	Description	Units	Range
40	4	Real	N/A	kVARAnalogTargetPUValue	kVAR Analog Target Value Per Unit	-	
44	4	Real	N/A	kVARDigitalTargetPUValue	kVAR Digital Target Value Per Unit	-	
48	4	Real	N/A	Spare13		-	
52	4	Real	N/A	Spare14		-	

Unscheduled Read Data Table

The Unscheduled Read data table contains metering and other non-time-critical status data read from the DECS-250 by the ControlLogix controller.

Data in this Controller Tag is read by the host controller from the DECS-250 by using unscheduled messaging controlled by the user program.

Data Type

The Unscheduled Read data table must be created by the user by using module-defined data type AB:1407_CGCM:Unscheduled_Read3.

Unscheduled Read Data Table

The Get Attributes Single service for instance 5 of the Assembly Object can access the information listed in Table 6-8.

Table 6-8. Get Attributes Single (Service Code 0x0E)

Name	Attribute ID	Data Type	Value
Data	3	UINT	See Table 6-9.
Size	4	UINT	172

The Set Attributes Single service is not supported for instance 5.

Configuration Checking

No range checking is performed on this data table.

Energy Metering Considerations

Energy metering values (kW_Hrs, kVAR_Hrs, and kVA_Hrs) are provided using a REAL data type. Values are expressed in a 32-bit floating-point format with a precision of seven digits. Table 6-9 lists the theoretical range of a REAL value.

The energy values accumulate when the average generator line current is no less than 1% of generator rated current. The limit that can be represented by an energy tag is expressed by the following formulas:

$$kVA_Hrs\ Limit = 8{,}338{,}600 \times rated\ kVA \times (\%\ of\ rated\ load)$$

$$kW_Hrs\ Limit = 8{,}338{,}600 \times rated\ kW \times (\%\ of\ rated\ load)$$

$$kVAR_Hrs\ Limit = 8{,}338{,}600 \times rated\ kVAR \times (\%\ of\ rated\ load)$$

When the energy tag value reaches (8,388,600 * rated kVA * % of rated load) and the DECS-250 is still providing the same load level or less, the value will not update.

For example, a 30 MVA machine operating at 10% load will yield an energy tag limit of:

(8,338,600 * 0.1 * 30,000) = 25,015,800,000 kVAh or 2.50158 x 10^{10} kVAh

When the energy tag value exceeds 8,338,600, rounding of the value begins to occur.

Energy values are not retentive. When the DECS-250 powers up or re-establishes a connection with the controller, the energy presets in the Unscheduled Write table are written to the energy metering values.

Table 6-9. Unscheduled Read Data Table, Assembly Instance 5

Byte	Size in Bytes	Type	Tag Name	Description	Units	Range
0	4	Real	AvgPF	Average Power Factor	PF	-1 to 1
4	4	Real	PhA_PF	Phase A Power Factor		
8	4	Real	PhB_PF	Phase B Power Factor		
12	4	Real	PhC_PF	Phase C Power Factor		
16	4	Real	Total_kVA	Total kVA	kVA	0 to 3E+09
20	4	Real	PhA_kVA	Phase A kVA		
24	4	Real	PhB_kVA	Phase B kVA		
28	4	Real	PhC_kVA	Phase C kVA		
32	4	Real	PhA_kW	Phase A kW	kW	-3E+09 to 3E+09
36	4	Real	Ph_B_kW	Phase B kW		
40	4	Real	PhC_kW	Phase C kW		
44	4	Real	Total_kVAR	Total kVAR	kVAR	
48	4	Real	PhA_kVAR	Phase A kVAR		
52	4	Real	PhB_kVAR	Phase B kVAR		
56	4	Real	PhC_kVAR	Phase C kVAR		
60	4	Real	Avg_I	Average Current	A	0 to 60,000
64	4	Real	PhA_I	Phase A Current		
68	4	Real	PhB_I	Phase B Current		
72	4	Real	PhC_I	Phase C Current		
76	4	Real	PhAB_GenV	Phase AB Generator Voltage	V	0 to 30,000
80	4	Real	PhBC_GenV	Phase BC Generator Voltage		
84	4	Real	PhCA_GenV	Phase CA Generator Voltage		
88	4	Real	AvgLN_GenV	Average LN Generator Voltage		
92	4	Real	PhA_GenV	Phase A Generator Voltage		
96	4	Real	PhB_GenV	Phase B Generator Voltage		
100	4	Real	PhC_GenV	Phase C Generator Voltage		
104	4	Real	AvgLL_BusV	Average LL Bus A Voltage		
108	4	Real	PhAB_BusV	Phase AB Bus A Voltage		
112	4	Real	PhBC_BusV	Phase BC Bus A Voltage		
116	4	Real	PhCA_BusV	Phase CA Bus A Voltage		
120	4	Real	AvgLN_BusV	Average LN Bus A Voltage		
124	4	Real	PhA_BusV	Phase A Bus A Voltage	V	0 to 30000
128	4	Real	PhB_BusV	Phase B Bus A Voltage		
132	4	Real	PhC_BusV	Phase C Bus A Voltage		
136	4	Real	BusB_V	Bus B Voltage		

Byte	Size in Bytes	Type	Tag Name	Description	Units	Range	
140	4	Real	Exc_V	Excitation Voltage		0	200
144	4	Real	Exc_I	Excitation Current	Amps	0	15
148	4	Real	ExcRipple_I (Rev.2.x) ExcRipple (Rev. 3.x)	Excitation Ripple Current	Amps/%	0	15
152	4	Real	kW_Hrs	kW Hours	kWh	$-3.04 * 10^{38}$	$3.04 * 10^{38}$
156	4	Real	kVAR_Hrs	kVAR Hours	kVARh	$-3.04 * 10^{38}$	$3.04 * 10^{38}$
160	4	Real	kVA_Hrs	kVA Hours	kVAh	0	$3.04 * 10^{38}$
164	4	Real	V_AdjustOffset	Voltage Adjust Offset	%	-10	10
168	2	INT	Spare				
170	2	INT	Resvd	Reserved			

Unscheduled Write Data Table

The Unscheduled Write data table contains gains and other configuration parameters that can be written to the DECS-250 by the ControlLogix controller, regardless of the excitation state.

Data in this Controller Tag is written by the host controller to the DECS-250 by using unscheduled messaging controlled by the user program.

Data Type

The Unscheduled Write data table is automatically created by using the appropriate module-defined data type, depending on the DECS-250 firmware revision.

Assembly Object Instance 6 – Unscheduled Write Data Table

The Get Attributes Single service for instance 6 of the Assembly Object can access the information listed in Table 6-10.

Table 6-10. Get Attributes Single (Service Code 0xoE)

Name	Attribute ID	Data Type	Value
Data	3	UINT	See Table 6-12.
Size	4	UINT	72

The Set Attributes Single service for instance 6 of the Assembly Object can access the information listed in Table 6-11.

Table 6-11. Set Attributes Single (Service Code 0x10)

Name	Attribute ID	Data Type	Value
Data	3	UINT	See Table 6-12.

Configuration Checking

When an unscheduled write is received, the DECS-250 verifies that individual parameters are within the range indicated in Table 6-12. If an out-of-range parameter is detected, the DECS-250 ignores all data in the unscheduled write in the message instruction. The DECS-250 does not perform application checking (that is, is a value suitable for the particular application) or dependency checking (that is is a value reasonable based on other values entered).

Data Table

Although the Unscheduled Write tag is contained in the Configuration tag in the Logic controller tags, the Unscheduled Write must be read back from the DECS-250 independently.

Table 6-12. Unscheduled Write Data Table, Asembly Instance 6

Byte	Size in Bytes	Type	Tag Name	Description	Units	Range	Error Code
0	4	Real	LineDropComp	Line Drop Compensation	%	0 to 10	1
4	4	Real	AVR_FCR_Kp	Automatic Voltage Regulator/Field Current Regulator Proportional Gain	-	0 to 1000	2
8	4	Real	AVR_FCR_Ki	Automatic Voltage Regulator/Field Current Regulator Integral Gain	-	0 to 1000	3
12	4	Real	AVR_FCR_Kd	Automatic Voltage Regulator/Field Current Regulator Derivative Gain	-	0 to 1000	4
16	4	Real	AVR_FCR_Td	Automatic Voltage Regulator/Field Current Regulator Derivative Time Constant	-	0 to 1000	5
20	4	Real	AVR_Kg	Automatic Voltage Regulator Overall Gain	-	0 to 1000	6
24	4	Real	FCR_Kg	Field Current Regulator Overall Gain	-	0 to 1000	7
28	4	Real	PF_Kg	Power Factor Overall Gain	-	0 to 1000	8
32	4	Real	PF_Ki	Power Factor Integral Gain	-	0 to 1000	9
36	4	Real	VAR_Kg	VAR Overall Gain	-	0 to 1000	10
40	4	Real	VAR_Ki	VAR Integral Gain	-	0 to 1000	11
44	4	Real	OEL_Kg	Over-excitation Limiting Overall Gain	-	0 to 1000	12
48	4	Real	OEL_Ki	Over-excitation Limiting Integral Gain	-	0 to 1000	13
52	4	Real	UEL_Kg	Under-excitation Limiting Overall Gain	-	0 to 1000	14
56	4	Real	UEL_Ki	Under-excitation Limiting Integral Gain	-	0 to 1000	15
60	4	Real	V_Match_Gain	Voltage Match Gain	-	0 to 1000	16
64	4	Real	kWHoursPreset	kW Hours Preset		-1×10^{12} to 1×10^{12}	17
68	4	Real	kVARHoursPreset	Kvar Hours Preset		-1×10^{12} to 1×10^{12}	18
72	4	Real	kVAHoursPreset	kVA Hours Preset		0 to 1×10^{12}	19

The DECS-250 uses a message size of 76 bytes.

Configuration Data Table

The Configuration data table contains configuration parameters that are automatically written to the DECS-250 by the ControlLogix controller. These writes occur when a connection is first established or when the user changes parameters in the RSLogix 5000 software module configuration dialog boxes and clicks the Apply or OK buttons. The DECS-250 accepts only Configuration data if all parameters are within range and excitation is disabled.

Data Type

The Configuration data table is automatically created by using module-defined data type AB:1407_CGCM:C:1. This tag does not show the first four bytes of the data table.

Unscheduled reads and writes of the Configuration data table are supported. In order to perform unscheduled reads or writes, you must create a user-defined data type (and tags based on it) that begins with a four-byte pad followed by the remaining tags in the AB:1407_CGCM:C:1 module-defined data type. You can do this in RSLogix 5000 software by highlighting the tags in the module-defined data type definition, choosing Copy from the Edit menu, selecting the element after the pad in the user-defined data type, and choosing Paste from the Edit menu.

The configuration is also available by using assembly instance 7. Instance 7 does not require the four-byte pad described above.

Note

Writing the DECS-250's configuration with unscheduled messaging is not recommended. Use only scheduled configuration messaging sent when the connection is opened or the module configuration is edited in RSLogix 5000 software.

Assembly Object Instance 4 – Configuration Data Table

The Get Attributes Single service for instance 4 of the Assembly Objects can access the information listed in Table 6-13.

Table 6-13. Get Attributes Single (Service Code 0xoE)

Name	Attribute ID	Data Type	Value
Data	3	UINT	See Table 6-15.
Size	4	UINT	344

The Set Attributes Single service for instance 6 of the Assembly Object can access the information listed in Table 6-14.

Table 6-14. Set Attributes Single (Service Code 0x10)

Name	Attribute ID	Data Type	Value
Data	3	UINT	See Table 6-15.

Configuration Checking

When configuration data is received, the DECS-250 verifies that individual parameters are within the minimum and maximum values indicated in Table 6-15. If an out-of-range parameter is detected, the DECS-250 enters a configuration fault mode and ignores all data in the configuration write. The Connection tab in the module configuration dialog box in RSLogix 5000 software displays an error code corresponding to the first offending configuration parameter. The DECS-250 does not perform any application checking or dependency checking.

Table 6-15. Unscheduled Configuration Read/Write Data Table, Assembly Instance 4

Byte	Size in Bytes	Type	Bits	Tag Name	Description	Units	Range	Error Code
0	1	SINT	N/A	Space Reserved for Logix controller Revision Configuration Number				
1	3	SINT	N/A	Pad Bytes Reserved for Logix controller Usage				
4	1	Bool	0	RevVARFltOutEn	Reverse VAR Fault Output Enable	-	0=Disabled, 1=Enabled	
		Bool	1	RevPwrFltOutEn	Reverse Power Fault Output Enable			
		Bool	2	OvrExcFltOutEn	Over-excitation Fault Output Enable			

Byte	Size in Bytes	Type	Bits	Tag Name	Description	Units	Range	Error Code
		Bool	3	Ovr_I_FltOutEn	Over-current Fault Output Enable			
		Bool	4	Undr_V_FltOutEn	Under-voltage Fault Output Enable			
		Bool	5	OvrVFltOutEn	Over-voltage Fault Output Enable			
		Bool	6	UndrFreqFltOutEn	Under-frequency Fault Output Enable			
		Bool	7	OvrFreqFltOutEn	Over-frequency Fault Output Enable			
5	1	Bool	0	Spare1		-	-	
		Bool	1	Loss_Exc_Flt_Out_En	Loss Excitation Fault Output Enable		0=Disabled, 1=Enabled	
		Bool	2	OEL_En	Over-excitation Limiting Enable			
		Bool	3	UEL_En	Under-excitation Limiting Enable			
		Bool	4	LossSensingFltOutEn	Loss Sensing Fault Output Enable			
		Bool	5	LossPMGFltOutEn	Loss Permanent Magnet Generator Fault Output Enable			
		Bool	6	RotDiodeFltOutEn	Rotating Diode Fault Output Enable			
		Bool	7	PhRotFltOutEn	Phase Rotation Fault Output Enable			
6	1	Bool	0	BusRotABC_ACB_Select	Bus Rotation ABC/ACB Select	-	0=ABC, 1=ACB	
		Bool	1	GenRotABC_ACB_Select	Generator Rotation ABC/ACB Select		0=ABC, 1=ACB	
		Bool	2	Spare2				
		Bool	3	PMG_Shunt_Select	PMG/Shunt Select		0=PMG, 1=Shunt	
		Bool	4	Spare3				
		Bool	5	Spare4				
		Bool	6	Internal_Tracking_En	Internal Tracking Enable		0=Disabled, 1=Enabled	
		Bool	7	PMG_1Ph_3PhSelect	PMG Single Phase/Three Phase Select		0=1Ph, 1=3Ph	
7	1	Bool	0…7	Spare5_12		-	-	
8	4	Real	N/A	GenVT_Pri_V	Generator Voltage Transformer Primary Voltage	V	1…30,000	1.
12	4	Real	N/A	GenVT_Sec_V	Generator Voltage Transformer Secondary Voltage	V	1…240	2
16	4	Real	N/A	BusA_VT_Pri_V	Bus A Voltage Transformer Primary Voltage	V	1…30,000	3
20	4	Real	N/A	BusA_VT_Sec_V	Bus A Voltage Transformer Secondary Voltage	V	1…240	4
24	4	Real	N/A	BusB_VT_Pri_V	Bus B Voltage Transformer Primary Voltage	V	1…30,000	5

Byte	Size in Bytes	Type	Bits	Tag Name	Description	Units	Range	Error Code
28	4	Real	N/A	BusB_VT_Sec_V	Bus B Voltage Transformer Secondary Voltage	V	1…240	6
32	4	Real	N/A	GenCT_Pri_I	Generator Current Transformer Primary Current	A	1…60,000	7
36	4	Real	N/A	GenCT_Sec_I	Generator Current Transformer Secondary Current	A	1…5	8
40	4	Real	N/A	CCCT_Pri_I	Cross Current Compensation Transformer Primary Current	A	1…60,000	9
44	4	Real	N/A	CCCT_Sec_I	Cross Current Compensation Transformer Secondary Current	A	1…5	10
48	2	INT	N/A	GenVT_Config	Generator Voltage Transformer Configuration	-	1…4	11
50	2	INT	N/A	BusVT_Config	Bus Voltage Transformer Configuration	-	1…5	12
52	4	Real	N/A	GenRated_W	Generator Rated Power	W	0…1E+09	13
56	4	Real	N/A	GenRated_V	Generator Rated Voltage	V	85…30,000	14
60	4	Real	N/A	GenRated_I	Generator Rated Current	A	10…60,000	15
64	4	Real	N/A	GenRatedFreq	Generator Rated Frequency	Hz	50…60	16
68	4	Real	N/A	GenRatedExcV	Generator Rated Excitation Voltage	V	1…200	17
72	4	Real	N/A	GenRatedExcI	Generator Rated Excitation Current	A	0.1…15	18
76	4	Real	N/A	LS_FS_V	Load Share Full Scale Voltage	V	0…4	19
80	4	Real	N/A	LSRate	Load Share Rate	s	0…100	20
84	4	Real	N/A	LSLimit	Load Share Limit	P.U.	0…1	21
88	4	Real	N/A	SyncFreqHiLim	Synchronization Frequency High Limit	Hz	-2…2	22
92	4	Real	N/A	SyncFreqLoLim	Synchronization Frequency Low Limit	Hz	-2…2	23
96	4	Real	N/A	SyncV_HiLim	Synchronization Voltage High Limit	%V	-25...25	24
100	4	Real	N/A	SyncV_LoLim	Synchronization Voltage Low Limit	%V	-25...25	25
104	4	Real	N/A	SyncPhHiLim	Synchronization Phase High Limit	Deg	-45...45	26
108	4	Real	N/A	SyncPhLoLim	Synchronization Phase Low Limit	Deg	-45...45	27
112	4	Real	N/A	SyncAcceptDly	Synchronization Accept Delay	s	0...10	28
116	4	Real	N/A	DeadbusGenFreqLoLim	Deadbus Generator Frequency Low Limit	Hz	40...70	29
120	4	Real	N/A	DeadbusGenFreqHiLim	Deadbus Generator Frequency High Limit	Hz	40...70	30
124	4	Real	N/A	DeadbusGenV_LoLim	Deadbus Generator Voltage Low Limit	V	85...30,000	31
128	4	Real	N/A	DeadbusGenV_HiLim	Deadbus Generator Voltage High Limit	V	85...30,000	32

Byte	Size in Bytes	Type	Bits	Tag Name	Description	Units	Range	Error Code
132	4	Real	N/A	BusA_PhOffset	Bus A Phase Offset	Deg	-180…180	33
136	4	Real	N/A	BusA_V_Scaler	Bus A Voltage Scaler	-	0…30,000	34
140	4	Real	N/A	BusB_PhOffset	Bus B Phase Offset	Deg	-180…180	35
144	4	Real	N/A	BusB_V_Scaler	Bus B Voltage Scaler	-	0…30,000	36
148	4	Real	N/A	VperHz_HiKneeFreq	Volts per Hz Upper Knee Frequency	Hz	15…90	37
152	4	Real	N/A	VperHz_HiSlope	Volts per Hz Upper Slope	PUV /PUHz	0…3	38
156	4	Real	N/A	VperHz_LoKneeFreq	Volts per Hz Low Knee Frequency	Hz	15…90	39
160	4	Real	N/A	VperHz_LoSlope	Volts per Hz Low Slope	PUV /PUHz	0…3	40
164	4	Real	N/A	V_DroopSetpt	Voltage Droop Setpoint	%	-30…30	41
168	2	INT	N/A	OvrExcV_Setpt	Over-excitation Voltage Setpoint	Volts /100	100…20,000	42
170	2	INT	N/A	OvrExcV_TimeDly	Over-excitation Voltage Time Delay	s/100	10…3000	43
172	2	INT	N/A	Ovr_V_Setpt	Over-voltage Setpoint	%/100	10000…14000	44
174	2	INT	N/A	Ovr_V_TimeDly	Over-voltage Time Delay	s/100	10…30,000	45
176	2	INT	N/A	Undr_V_Setpt	Under-voltage Setpoint	%/100	6000…10,000	46
178	2	INT	N/A	Undr_V_TimeDly	Under-voltage Time Delay	s/100	10…30,000	47
180	2	INT	N/A	OpenDiodeMonitorLevel	Open Diode Monitor Level	%/100	0…10,000	48
182	2	INT	N/A	ShortedDiodeMonitorLevel	Shorted Diode Monitor Level	%/100	0…10,000	49
184	2	INT	N/A	DiodeMonitorTimeDly	Diode Monitor Time Delay	s/100	10…30,000	50
186	2	INT	N/A	MainPole	Main Pole	Poles	2…24	51
188	2	INT	N/A	ExciterPole	Exciter Pole	Poles	2…24	52
190	2	INT	N/A	Rev_kW_Setpt	Reverse kW Setpoint	%/100	100…10,000	53
192	2	INT	N/A	Rev_kW_TimeDly	Reverse kW Time Delay	s/100	10…30,000	54
194	2	INT	N/A	Rev_kVAR_Setpt	Reverse kVAR Setpoint	%/100	100…10,000	55
196	2	INT	N/A	Rev_kVAR_TimeDly	Reverse kVAR Time Delay	s/100	10…3000	56
198	2	INT	N/A	OvrFreqSetpt	Over-frequency Setpoint	Hz/100	3000…7000	57
200	2	INT	N/A	OvrFreqTimeDly	Over-frequency Delay	s/100	10…30,000	58

Byte	Size in Bytes	Type	Bits	Tag Name	Description	Units	Range	Error Code
202	2	INT	N/A	UndrFreqSetpt	Under-frequency Setpoint	Hz/100	3000…7000	59
204	2	INT	N/A	UndrFreqTimeDly	Under-frequency Delay	s/100	10…30,000	60
206	2	INT	N/A	Ovr_I_Setpt	Over-current Setpoint	%/100	1000…32,000	61
208	2	INT	N/A	Ovr_I_TimeDly	Over-current Time Delay	Time dial setting /100	0...990	62
210	2	INT	N/A	Ovr_I_Curve	Over-current Curve	-	1...17	63
212	2	INT	N/A	Ovr_I_VrestSetpt	Over-current Voltage Restraint Setpoint	%/100	0...20,000	64
214	2	INT	N/A	Spare13		-	-	65
216	2	INT	N/A	LossExc_I_Setpt	Loss Excitation Current Setpoint	A/100	10…1500	66
218	2	INT	N/A	LossExc_I_TimeDly	Loss Excitation Current Delay	s/100	10…990	67
220	4	Real	N/A	UEL_Curve_W_Pt1	Under-excitation Limiting Curve Power Point 1	W	0...1E+09	68
224	4	Real	N/A	UEL_Curve_W_Pt2	Under-excitation Limiting Curve Power Point 2	W	0...1E+09	69
228	4	Real	N/A	UEL_Curve_W_Pt3	Under-excitation Limiting Curve Power Point 3	W	0...1E+09	70
232	4	Real	N/A	UEL_Curve_W_Pt4	Under-excitation Limiting Curve Power Point 4	W	0...1E+09	71
236	4	Real	N/A	UEL_Curve_W_Pt5	Under-excitation Limiting Curve Point 5	W	0...1E+09	72
240	4	Real	N/A	UEL_Curve_VAR_Pt1	Under-excitation Limiting VAR Point 1	VARs	0...1E+09	73
244	4	Real	0…7	UEL_Curve_VAR_Pt2	Under-excitation Limiting VAR Point 2	VARs	0...1E+09	74
248	4	Real	0…7	UEL_Curve_VAR_Pt3	Under-excitation Limiting VAR Point 3	VARs	0...1E+09	75
252	4	Real	0…7	UEL_Curve_VAR_Pt4	Under-excitation Limiting VAR Point 4	VARs	0...1E+09	76
256	4	Real	0…7	UEL_Curve_VAR_Pt5	Under-excitation Limiting VAR Point 5	VARs	0...1E+09	77
260	4	Real	0…7	OEL_OnlineHiSetpt	Over-excitation Online High Setpoint	A	0...9999	78
264	4	Real	N/A	OEL_OnlineHiTimeDly	Over-excitation Online High Time Delay	s	0...60	79
268	4	Real	N/A	OEL_OnlineMedSetpt	Over-excitation Online Medium Setpoint	A	0...9999	80
272	4	Real	N/A	OEL_OnlineMedTimeDly	Over-excitation Online Medium Time Delay	s	0...120	81
276	4	Real	N/A	OEL_OnlineLoSetpt	Over-excitation Online Low	A	0...9999	82
280	4	Real	N/A	OEL_OfflineHiSetpt	Over-excitation Offline High Setpoint	A	0...9999	83

Byte	Size in Bytes	Type	Bits	Tag Name	Description	Units	Range	Error Code
284	4	Real	N/A	OEL_OfflineHiTimeDly	Over-excitation Offline High Time Delay	s	0…10	84
288	4	Real	N/A	OEL_OfflineLoSetp	Over-excitation Offline Low Setpoint	A	0…9999	85
292	4	Real	N/A	AVR_Traverse_Rate	AVR Traverse Rate	s	0…200	86
296	4	Real	N/A	FCR_Traverse_Rate	FCR Traverse Rate	s	0…200	87
300	4	Real	N/A	VAR_Traverse_Rate	VAR Traverse Rate	s	0…200	88
304	4	Real	N/A	PF_Traverse_Rate	PF Traverse Rate	s	0…200	89
308	4	Real	N/A	Softstart_InitLevel	Soft Start Initial Level	%	0…90	90
312	4	Real	N/A	SoftStartTime	Soft Start Time	s	1…7200	91
316	4	Real	N/A	InternalTrackRate	Internal Track Rate	s/FS	1…80	92
320	4	Real	N/A	InternalTrackDly	Internal Track Delay	s	0…8	93
324	4	Real	N/A	RedndtTrackRate	Redundant Track Rate	s/FS	1…80	94
328	4	Real	N/A	RedndtTrackDly	Redundant Track Delay	s	0…8	95
332	4	Real	N/A	CrossCurrentGain	Cross Current Gain	-	-30…30	96
336	4	Real	N/A	AVR_FCRAuxGain	AVR/FCR Auxiliary Gain	-	-99…99	97
340	4	Real	N/A	PF_VARAuxGain	Power Factor/VAR Auxiliary Gain	-	-99…99	98

7 • Troubleshooting

Introduction

This chapter lists suggested diagnostic and correction actions for a variety of common generator system malfunctions. If the suggested actions do not resolve the anomaly, contact Basler Electric.

This chapter does not include procedures to diagnose or correct issues related to communication between the DECS-250 and its host Logix controller. Information about diagnosing ControlNet network communication issues is provided in Rockwell publication CNET-IN002.

Troubleshooting Procedures

Troubleshooting procedures are organized in the following categories.

- Excitation control – FCR, Table 7-1
- Excitation control – AVR, Table7-2
- Reactive power control – PF, Table 7-3
- Reactive power control – var, Table 7-4
- Compensation mode – droop, Table 7-5
- Compensation mode – cross-current, Table 7-6
- Compensation mode – line drop, Table 7-7
- Limiting mode – UEL, Table 7-8
- Limiting mode – OEL, Table 7-9
- Real power load sharing, Table 7-10
- Synchronizing, Table 7-11
- Metering, Table 7-12
- Communication, Tables 7-13 and 7-14
- Redundancy, Table 7-15
- Protection, Table 7-16

Table 7-1. Excitation Control - FCR Troubleshooting

Symptom	Most Likely Cause	Diagnostic Action	Corrective Action
No excitation current output	Excitation is not enabled	Check excitation enable (hardware and software) and FCR select	Correct Logix controller logic or I/O as required
	Wiring error	Check wiring for excitation enable, excitation current output, open fuses, grounding, and PMG/supply	Correct wiring as required
	No supply/PMG power	Measure voltage at DECS-250 PMG/supply input terminals	Correct supply anomaly if insufficient voltage is measured
Excitation output is less than setpoint	FCR not selected/enabled	Check excitation enable (hardware and software) and FCR select	Correct Logix controller logic or I/O as required
	Wiring error	Check wiring for excitation enable, excitation current output, open fuses, grounding, and PMG/supply	Correct wiring as required
Excitation output is less than setpoint—continued	Insufficient supply power	Measure voltage at DECS-250 PMG/supply input terminals	Correct supply anomaly if insufficient voltage is measured

Symptom	Most Likely Cause	Diagnostic Action	Corrective Action
	Field resistance too great	Disconnect field current outputs at DECS-250 and measure load resistance	Correct/verify load resistance is within DECS-250 capability
	Gain misadjusted	Check gains entered into DECS-250 configuration	Calculate/adjust as required
Excitation output is greater than setpoint	FCR not selected/enabled	Check excitation FCR select	Correct Logix controller logic or I/O as required
	Wiring error	Check wiring for excitation enable, excitation current output, open fuses, grounding, and PMG/supply	Correct wiring as required
	Gain misadjusted	Check gains entered into DECS-250 configuration	Calculate/adjust as required
Excitation is erratic/unstable	Gain misadjusted	Check gains entered into DECS-250 configuration	Calculate/adjust as required
	Wiring error	Check wiring for excitation enable, excitation current output, open fuses, grounding, and PMG/supply	Correct wiring as required

Table 7-2. Excitation Control - AVR Troubleshooting

Symptom	Most Likely Cause	Diagnostic Action	Corrective Action
No excitation current output	Excitation is not enabled	Check excitation enable (hardware and software) and FCR select	Correct Logix controller logic or I/O as required
	Wiring error	Check wiring for excitation enable, excitation current output, open fuses, grounding, and PMG/supply	Correct wiring as required
	No supply/PMG power	Measure voltage at DECS-250 PMG/supply input terminals	Correct supply anomaly if insufficient voltage is measured
Voltage output is less than setpoint	AVR not selected/enabled	Check excitation enable (hardware and software) and AVR select	Correct Logix controller logic or I/O as required
	Wiring error	Check wiring for excitation enable, excitation current output, open fuses, grounding, and PMG/supply	Correct wiring as required
	Insufficient supply power	Measure voltage at DECS-250 PMG/supply input terminals	Correct supply anomaly if insufficient voltage is measured
		Measure generator residual voltage (shunt excitation)	If less than 10 Vac, consult generator documentation and flash the generator field
Voltage output is less than setpoint—continued	Generator not up to rated speed	Check generator speed	Increase generator speed to rated value
			Correct condition preventing rated speed from being attained

Symptom	Most Likely Cause	Diagnostic Action	Corrective Action
	Field resistance too great	Disconnect field current outputs at DECS-250 and measure load resistance	Correct/verify load resistance is within DECS-250 capability
	Gain misadjusted	Check gains entered into DECS-250 configuration	Calculate/adjust as required
	Excitation limiting active	Check OEL active input	Correct OEL configuration or change operating point
	Droop compensation is driving down the voltage	Check droop enable	Adjust/disable droop compensation
Voltage output is greater than setpoint	AVR not selected/enabled	Check excitation AVR select	Correct Logix controller logic or I/O as required
	Wiring error	Check wiring for excitation current output, VT inputs, open fuses, grounding, and PMG/supply	Correct wiring as required
	Gain misadjusted	Check gains entered into DECS-250 configuration	Calculate/adjust as required
	Excitation limiting active	Check UEL active input	Correct UEL configuration or change operating point
	Droop compensation is driving up the voltage	Check droop enable	Adjust/disable droop compensation
Voltage is erratic or unstable	Gain misadjusted	Check gains entered in DECS-250 configuration	Calculate/adjust as required
	Wiring error	Check wiring for excitation current output, VT inputs, open fuses, grounding, and PMG/supply	Correct wiring as required
	Prime mover is unstable	Check prime mover governor operation	Correct as required
	Excitation limiting active	Check UEL/OEL active input	Correct UEL/OEL configuration or change operating point

Table 7-3. Reactive Power Control - PF Troubleshooting

Symptom	Most Likely Cause	Diagnostic Action	Corrective Action
Power factor not at PF setpoint	PF not enabled	Check input tag **PF_Ened**	If not enabled, select appropriate modes of operation to enable PF mode
	Gain misadjusted	Observe response of PF to changes in PF setpoint	If response is slow, increase gain
	Diode failure	Use diode monitor if previously configured or measure/check diodes	Replace diodes as required
	Excitation limiting active	Check UEL/OEL active input	Correct UEL/OEL configuration or change operating point
Power factor unstable/erratic	Gain misadjusted	Observe response of PF to changes in PF setpoint	Adjust until a stable response is observed
	Wiring error	Check stability in other control mode such as Droop	If stable in other mode, see above. Otherwise, check field output wiring and VT/CT input wiring

Table 7-4. Reactive Power Control - Var Troubleshooting

Symptom	Most Likely Cause	Diagnostic Action	Corrective Action
Vars not at VAR setpoint	VAR not enabled	Check input tag **VAR_Ened**	If not enabled, select appropriate modes of operation to enable VAR mode
	Gain misadjusted	Observe response of vars to changes in VAR setpoint	If response is slow, increase gain
	Diode failure	Use diode monitor if previously configured or measure/check diodes	Replace diodes as required
	Excitation limiting active	Check UEL/OEL active input	Correct UEL/OEL configuration or change
Vars unstable/erratic	Gain misadjusted	Observe response of vars to changes in VAR setpoint	Adjust until a stable response is observed
	Wiring error	Check stability in other control mode such as Droop	If stable in other mode, see above. Otherwise, check field output wiring and VT/CT input wiring

Table 7-5. Compensation Mode - Droop Troubleshooting

Symptom	Most Likely Cause	Diagnostic Action	Corrective Action
Voltage does not change with changes in reactive load while not connected to the grid	Droop not selected/active	Check tag **Droop_Ened**	If not active, check/correct logic for mode selection
	Cross current mode is enabled/selected	Check **Droop_CCCT_Select** tag	If active, check/correct logic for mode selection
	Metering error	See Table 7-12	See Table 7-12
Voltage and/or reactive load is unstable when operating in droop	AVR gains misadjusted	Check voltage stability when operating isolated from load and, if possible, in constant voltage control	Calculate/correct AVR gains, if required
	Metering error	See Table 7-12	See Table 7-12

Table 7-6. Compensation Modes - Cross Current Troubleshooting

Symptom	Most Likely Cause	Diagnostic Action	Corrective Action
Vars share but not equally—even when the system load changes	Gain maladjustment	Check CCCT gain	Correct as required
	CT or input impedance mismatch	Verify CT selection and measure input impedance to each AVR	Correct or replace CTs as required. Add resistors as required to match AVR input resistance.
Vars do not share at all and when a voltage adjustment is made, nothing happens	Cross current mode is not enabled/selected	Check **Droop_CCCT_Select** tag and **kVAR_LS-En** tag	If not active, check/correct logic for mode selection
	Gain maladjustment	Check CCCT gain	Correct as required
	Wiring error	Measure voltage at ID+/– terminal and adjust reactive power/voltage	Correct wiring as required if voltage signal from CCCT circuit is not observed
Vars do not share at all and when a voltage adjustment is made,	Cross current mode is not enabled/selected	Check **Droop_CCCCT_Select** tag	If not active, check/correct logic for mode selection

Symptom	Most Likely Cause	Diagnostic Action	Corrective Action
reactive power transfers to/from the machine	Wiring error	Measure voltage at ID+/– terminal and adjust reactive power/voltage	Correct wiring as required if voltage signal from CCCT circuit is not observed
	Gain maladjustment	Check CCCT gain	Correct as required
Vars transfer opposite from one generator to another	CT polarity or differential circuit wiring error	Verify CT polarity on each generator by disconnecting differential circuit and operating on cross-current control	Correct CT polarity and differential circuit wiring as needed
Vars share but are unstable	Gain maladjustment	Check CCCT gain	Correct as required

Table 7-7. Compensation Modes - Line Drop Troubleshooting

Symptom	Most Likely Cause	Diagnostic Action	Corrective Action
Voltage does not change with changes in reactive load while not connected to the grid	Line drop not active	Check tag **LineDropComp**	If not active, check/correct logic for mode selection
	Metering error	See Table 7-12	See Table 7-12
Voltage is unstable	AVR gains maladjusted	Check voltage stability when operating isolated from load and, if possible, in constant voltage control	Calculate/correct AVR gains if required
	Metering error	See Table 7-12	See Table 7-12

Table 7-8. Limiting Modes - UEL Troubleshooting

Symptom	Most Likely Cause	Diagnostic Action	Corrective Action
Vars absorbed exceed the programmed UEL limit (UEL does not limit/activate)	UEL not enabled	Check tag **UEL_En** and configuration	Correct logic or configuration as required
	UEL gain maladjusted	Force into UEL	Adjust gains as required
	UEL not configured	Check UEL curve intercepts against reactive capability curve	Correct as required
	Metering error	See Table 7-12	See Table 7-12
Excitation is unstable when UEL is active	UEL gain maladjusted	Force into UEL	Adjust gains as required

Table 7-9Limiting Modes - OEL Troubleshooting

Symptom	Most Likely Cause	Diagnostic Action	Corrective Action
Excitation current exceeds the programmed OEL limit (OEL does not limit/activate)	OEL not enabled	Check tag **OEL_En** and configuration	Correct logic or configuration as required
	OEL gain maladjusted	Force into OEL	Adjust gains as required
	OEL not configured	Check OEL settings against generator excitation requirements/limits	Correct as required
	Metering error	See Table 7-12	See Table 7-12
Excitation is unstable when OEL is active	OEL gain maladjusted	Force into OEL	Adjust gains as required

Table 7-10. Real Power Load Sharing Troubleshooting

Symptom	Most Likely Cause	Diagnostic Action	Corrective Action
Units do not share load	Load share lines not properly connected	Measure voltage at each LS+/– terminal. Verify voltage represents pu load	Reconnect LS lines
	Load sharing not enabled	Open LS terminals, apply a load, and measure LS voltage. LS volts =kW÷Rated kW×LSFS Voltage	If voltage not correct, replace DECS-250 after verifying configuration settings
	DECS-250 not properly configured	Check output tag **kW_LS_EN** is set and input tag **kW_LS_ACTIVE** is TRUE	Correct input configuration parameters
	Wiring errors cause DECS-250 to not meter kW properly	Check kW indication from DECS-250 against second meter for accurate kW indication	Correct wiring errors
	Governor not responding to load share error	Observe that load share error is being received from DECS-250 in host controller	Correct anomaly in host controller if a valid load share error is received
Units do not share load equally; one unit increases while the other unit decreases	Load share lines connected with polarity reversed	Observe that load share error is being received from DECS-250 in host controller and error polarity is correct	Correct polarity on LS lines
Units do not share load equally; both units change together	Load share full scale voltage configurations do not match	Check full-load voltage configuration in each load share device	Set full load voltage the same in all load share devices
	Governor error	Check governor for use of LS error from DECS-250	Correct governor

Table 7-11. Synchronizing Troubleshooting

Symptom	Most Likely Cause	Diagnostic Action	Corrective Action
No close indication from DECS-250	Phase not matched	Observe phase match tag during synchronization	If phase match is indicated, check close command tag. If not phase match indicated, check phase match error.
		Observe phase error reported by DECS-250 during synchronization	If no phase error is reported by DECS-250, correct wiring and verify appropriate synchronization mode is active
			If phase error reported, verify governor is responding to DECS-250 reported error
	Close output from DECS-250 not being examined	Monitor close breaker tag from DECS-250	If close indication received, check use of tag. If no close indication, check match errors.
	Frequency not matched	Observe frequency match tag during synchronization	If frequency match indicated, check close command tag. If no frequency match

Symptom	Most Likely Cause	Diagnostic Action	Corrective Action
No close indication from DECS-250—continued			indicated, check frequency match error.
		Observe frequency error, generator frequency, and selected bus frequency reported by DECS-250 during synchronization	If no frequency error is reported by the DECS-250, correct wiring and verify appropriate synchronization mode is active
			If frequency error reported, verify governor is responding to DECS-250 reported error
	Sync parameter configuration incorrect	Observe configured synchronization limits, VT input configuration, and generator rated entries	Correct any errors in the configuration entries
	Voltage not matched	Observe voltage match tag during synchronization	If voltage match indicated, check close command tag. If not voltage match indicated, check voltage match error.
		Observe voltage error, generator voltage, and selected bus voltage reported by DECS-250 during synchronization	If no voltage error is reported by DECS-250, correct wiring and verify appropriate synchronization mode is active
			If voltage error is reported, verify voltage setpoint to DECS-250 is being adjusted appropriately to provide voltage correction
Close indication from DECS-250 when sync parameters not met	Configuration errors	Observe VT and bus offset configuration parameters to verify they reflect the desired/expected VT wiring	Correct configuration to match expected VT wiring
	Wiring errors	Adjust manually such that test equipment (reference) indicates synchronism, then observe diagnostics above. This information can be used to determine most likely wiring error. Voltage not matched, verify PT wiring and VT ratios are correct. Phase or frequency not matched, verify phase rotation and polarity of VT wiring	Correct VT wiring

Metering Troubleshooting

If there is a difference between the metering data reported by the DECS-250 and a reference meter, verify the metering used to determine the DECS-250 malfunction is being correctly used and in calibration.

Table 7-12. Metering Troubleshooting

Symptom	Most Likely Cause	Diagnostic Action	Corrective Action
Voltage does not read correctly	Configuration errors	Observe VT configuration and rotation parameters and to verify they reflect desired/expected VT wiring	Correct configuration to match expected VT wiring
	Wiring errors	Observe each L-L, phase, average voltage, and rotation indication. Verify that the indicated rotation matches the configured rotation. L-L voltage (and L-N, if applicable) reading all low or high indicates a ratio error. If only one or two are low or high, a polarity, grounding, or disconnection issue is indicated.	Correct phase rotation, polarity, grounding, or fusing as applicable.
		Measure signal at DECS-250 terminals	If the indicated voltage corresponds to the measured value, correct the VT wiring. If the indicated voltage does not correspond to the measured voltage, see configuration errors. If configuration is correct, replace the DECS-250.
Current does not read correctly	Configuration errors	Observe CT configuration parameters to verify they reflect desired/expected CT ratios	Correct configuration to match expected CT wiring
	Wiring errors	Observe each phase and average current indication. Each phase current indicated is approximately equal and the average represents the average of the three. All phases low or high indicates a ratio error. One or two phases low or high indicates polarity, grounding, or disconnection issues.	Correct phase rotation, polarity, or grounding as applicable. Confirm that the correct CT inputs are used.
		Measure signal at DECS-250 terminals	If indicated current corresponds to the measured value, correct the CT wiring. If the indicated current does not correspond to the measured current, see the configuration errors. If configuration is correct, replace the DECS-250.

Symptom	Most Likely Cause	Diagnostic Action	Corrective Action
kW does not read correctly kW does not read correctly—continued	CT wiring error	See current metering troubleshooting, above. Observe kVA indicated. If kVA and voltage are correct, verify the CT phase rotation	See current metering troubleshooting above
	VT wiring error	See voltage metering troubleshooting above. Then, observe the indicated kVA. If kVA and voltage are correct, see CT wiring troubleshooting.	See voltage metering troubleshooting above.
kvar does not read correctly	CT wiring error	See current metering troubleshooting above. observe the indicated kVA. If the kVA and voltage are correct, verify the CT phase rotation.	See current metering troubleshooting above.
	VT wiring error	Wee voltage metering troubleshooting above. Then, observe the indicated kVA. If the kVA and voltage are correct, see CT wiring troubleshooting.	See voltage metering troubleshooting above.

Communication

ControlNet network status indicators (A, B, and MS) are located alongside the two ControlNet BNC connectors and indicate the state of the connected network. If more than one state is present, the status indicators always reflect the highest priority status present on the network. The following tables describe the status indicator states and the priority of each status indicator.

Table 7-13. Network Status Indicator A and B States

Status Indicator	Indicator State	Description
A and B	Off	Not online/no power
	Flashing red (1 Hz)	Incorrect node configuration, duplicated MAC ID
	Alternating red/green	Self-test of bus controller
	Red	Fata event or faulty unit
A or B	Off	Channel is disabled
	Alternating red/green	Invalid link configuration
	Flashing green (1 Hz)	Temporary errors (node self corrects) or node is not configured to go online
	Green	Normal operation
	Flashing red (1 Hz)	Media fault or no other nodes on the network

Table 7-14. Module Status (MS) Indicator States

MS Indicator State	Description
Off	No power
Green	Operating in normal condition, controlled by a scanner in Run state
Flashing green (1 Hz)	The module is not configured or the scanner is in idle state

Red	Unrecoverable faults, EXCEPTION, or fata event
Flashing red (1 Hz)	Recoverable faults, MAC ID has been changed after initialization

Table 7-15. Redundancy Troubleshooting

Symptom	Most Likely Cause	Diagnostic Action	Corrective Action
Both DECS-250 units operate as primary (both units are providing excitation to the generator)	Serial cable not properly connected	Disable excitation to one DECS-250	If excitation turns off as commanded (one remaining DECS-250 operating), repair/replace cable. If both DECS-250s continue to provide excitation, replace the DECS-250 controllers.
		Connect PC by using HyperTerminal or similar application to verify communication output from DECS-250 redundancy communication port	If communication exists, see above. if no communication output exists, replace the DECS-250.
One or both DECS-250 units will not operate as primary	Faulty wiring	Measure excitation enable input to DECS-250 that will not act as primary	Verify voltage is applied to excitation enable input terminal
		Check operation of external relay and associated wiring for redundancy relay and output	Correct excitation redundancy relay operation
		Check wiring of excitation +/– output for DECS-250	Correct excitation output wiring
	PLC error	Check output to excitation enable input (hardware and software)	Correct logic as required
		Check logic to redundancy relay (if applicable)	Correct logic as required
	One DECS-250 has failed or is not configured properly	Troubleshoot as non-redundant DECS-250	Correct or replace as needed

Table 7-16. Protection Troubleshooting

Symptom	Most Likely Cause	Diagnostic Action	Corrective Action
Loss of excitation current (40)	Wiring error	Check excitation output wiring	Correct wiring as required
	Gains maladjusted	Check AVR gains	Calculate/adjust gains as required
Overexcitation voltage (59F)	Wiring error	Check excitation output wiring	Correct wiring as required
	Gains maladjusted	Check AVR gains	Calculate/adjust gains as required
	OEL limit exceeded	Check OEL operation	Correct as required
Generator overvoltage (59)	Rapid loss of large load		
	Gains maladjusted	Check AVR gains	Calculate/adjust gains as required
	Overload		

Symptom	Most Likely Cause	Diagnostic Action	Corrective Action
Generator undervoltage (27)	Wiring error	Check VT wiring. Refer to voltage metering trouble-shooting information	Correct wiring as required
Loss of sensing (60FL) Loss of sensing (60FL)—continued	Fuse open	Check VT fuses	Replace as required
	Wiring error	Check for open connections and phase rotation reversal	Correct wiring as required
Loss of PMG/excitation power (27)	Supply circuit breaker trip/fuse open	Check PMG supply. Measure with a voltmeter at DECS-250 input terminals	Correct/replace PMG input protection as required
	Wiring error	Check PMG supply. Measure with a voltmeter at DECS-250 input terminals	Correct wiring as required
	PMG failure	Check PMG supply. Measure with a voltmeter at DECS-250 input terminals	Repair as required
	Incorrect configuration	Check single-phase versus three-phase selection	Correct as required
Reverse vars (40Q)	Underexcitation	Check UEL configuration, if required	Correct as required
	Incorrect operating mode selected	Check selected operating mode for operating requirements	Select as appropriate
Overfrequency (81O)	Governor error		Connect as required
Underfrequency (81U)	Governor error		Connect as required
Reverse power (32R)	Governor error		Connect as required
Rotating diode monitor	Failed diode	Remove diodes and test	Replace diode
	Incorrect configuration	Confirm test/setup of diode monitor parameters with active parameters	Correct as required
	Insufficient number of flyback diodes installed	Check number of external flyback diodes installed at DECS-250 excitation output as required	Install as required
Phase rotation error (47)	Wiring error	See voltage metering troubleshooting	Correct wiring as required
Generator overcurrent (51)	Fault or large load condition		
	Incorrect configuration	Check configuration	Correct as required

8 • Specifications

Control Power

The device is to be powered by a 24 Vdc nominal battery or 24 Vdc power supply with ATEX certification.

Operating Voltage..... 24 Vdc
Burden ..... 30 W
Terminals ..... BAT+ (47), BAT– (48)

Operating Excitation Power

Voltage Range
For 32 Vdc Excitation Power..... 56 to 70 Vac
For 63 Vdc Excitation Power..... 100 to 139 Vac or 125 Vdc
For 125 Vdc Excitation Power..... 190 to 277 Vac single-phase, 190 to 260 Vac three-phase, or 250 Vdc

Frequency Range..... dc, 50 to 500 Hz

Caution
Mise en garde

For redundant applications with a single-phase, 300 Hz Marathon® PMG, only one DECS-250 can be connected to the PMG at a time. In redundant applications, a contactor should be used for each DECS-250 power input or equipment damage may result.

If operating power exceeds 260 Vac, the connection must be configured as L-N single-phase or equipment damage may result.

Pour les applications redondantes avec une PMG Marathon® 300 Hz monophasée, un seul DECS-250 peut être connecté à la PMG à la fois. Dans les applications redondantes, un contacteur doit être utilisé pour chaque entrée d'alimentation du DECS-250, faute de quoi des dommages matériels pourraient en résulter.

Si la puissance de fonctionnement dépasse 260 Vac, la connexion doit être configurée en monophasé L-N ou des dommages matériels peuvent en résulter.

Table 8-1 lists the required nominal operating power voltages and configurations required to obtain 32 Vdc, 63 Vdc, or 125 Vdc continuous field power from the DECS-250.

Note

To achieve the proper DECS-250 output voltage, the appropriate operating power input voltage must be provided.

Table 8-1. Operating Power Requirements

Excitation Power	32 Vdc	63 Vdc	125 Vdc
Input Power Configuration	1-phase or 3-phase		
Nominal Input Voltage	60 Vac	120 Vac	240 Vac
Full-Load Continuous Voltage	32 Vdc	63 Vdc	125 Vdc
Full-Load Continuous Current	15 Adc		
Minimum Residual Voltage for Buildup	6 Vac		
Operating Power Input Burden at 15 Adc Excitation Output	780 VA	1,570 VA	3,070 VA
Operating Temperature at 15 Adc Excitation Output	–40 to +70°C (–40 to +158°F)		

Generator and Bus Voltage Sensing

Type 1-phase, 3-phase, 3-wire, 3-phase, 4-wire
Nominal Input Range at 50/60 Hz ..... 100 to 600 Vac, ±10%
Burden ..... <1 VA per phase

Terminals

Generator Voltage Sensing..... V GEN A (13), V GEN B (14), V GEN C (15), V GAN N (16)
Bus Voltage Sensing ..... V BUS A (17), V BUS B (18), V BUS C (19), V BUS N (20)

Generator Current Sensing

Configuration ..... 4 inputs: A-, B-, C-phase, and cross-current compensation CT input
Type ..... 1-phase (B-phase), 1-phase with cross-current compensation, 3-phase, 3-phase with cross-current compensation
Range ..... 1 Aac or 5 Aac nominal, 30 Aac maximum
Frequency ..... 50/60 Hz

Burden
- 1 Aac Sensing ..... <1 VA
- 5 Aac Sensing ..... <1 VA

Terminals

A-Phase ..... I1+ (36), I1– (37)
B-Phase ..... I2+ (38), I2– (39)
C-Phase ..... I3+ (40), I3– (41)
Cross-Current Compensation ..... ID+ (42), ID– (43)

Auxiliary Input

Voltage Range..... –10 to +10 Vdc
Burden ..... >20 kΩ
Terminals ..... VREF+ (25), VREF– (24), A-COM (23)

Communication Ports

Universal Serial Bus (USB)

This port is used for factory-testing and is not enabled for customer use.

Interface ..... Type B USB jack
Location ..... Front panel

RS-232

This port is used for external autotracking in redundant DECS-250 applications.

Interface ..... DB-9 connector
Location ..... Right side panel

Ethernet, Copper (Style xxxxx1x)

This port is used for factory-testing and is not enabled for customer use.

Type ..... 100Base-T copper
Interface ..... RJ45 jack
Location ..... Right side panel

Remote Excitation Enable Input

Voltage rating ..... 24 Vdc nominal
Current rating at 24 Vdc..... 4 mAdc
Input impedance..... 5.6 kΩ
Logical high voltage..... 18 Vdc (min)
Logical low voltage ..... 0 Vdc (open)

Contact Outputs

Make and Break Ratings (Resistive)

24 Vdc..... 7.0 Adc
48 Vdc..... 0.7 Adc
125 Vdc..... 0.2 Adc
120/240 Vac..... 7.0 Aac

Carry Ratings (Resistive)

24/48/125 Vdc ..... 7.0 Adc
120/240 Vac..... 7.0 Aac

Terminals

Fault Relay ..... FLT RLY (29, 30)
Redundancy Relay ..... RD RLY (31, 32)
Cross-Current Relay..... ID RLY (27, 28)

Field Power Output

Continuous Rating..... 15 Adc
Terminals ..... EXC+ (54), EXC– (55)

Minimum 10-Second Forcing Output Ratings

60 Vac Input..... 50 Vdc, 30 Adc
120 Vac Input..... 100 Vdc, 30 Adc
240 Vac Input..... 200 Vdc, 30 Adc

Minimum Field Resistance

32 Vdc Application ..... 2.13 Ω
63 Vdc Application ..... 4.2 Ω
125 Vdc Application ..... 8.3 Ω

Regulation

AVR Operating Mode

Accuracy ..... ±0.25% over the load range at rated power factor and constant generator frequency.
Steady-State Stability ..... ±0.1% at constant load and generator frequency.
Temperature Drift ..... The maximum error due to temperature drift will be □ 0.005% of full scale per degrees Celsius for voltage and current measurements and □0.010% of full scale per degree of Celsius for the watt and var measurements.
V/Hz Characteristic..... Slope from 0 to 3 PU is adjustable in 0.1 PU increments. Two knees and two slopes are available.
Response Time ..... <1 cycle

FCR Operating Mode

Accuracy ..... ±1% of rated current.

Var Operating Mode

Accuracy ..... ±0.4% of the nominal VA rating at the rated frequency.

Power Factor Mode

Accuracy ..... ±0.02% of the PF setpoint for the real power between 10 and 100% at the rated frequency.

Parallel Compensation

Modes ..... Reactive Droop and Reactive Differential (cross-current compensation)∗
Droop Adjust Range ..... 0 to 30%
Accuracy: ..... +0.3% of rated cross current input current
Line-Drop Compensation Range..... 0 to 10% of rated voltage in 0.1% increments.

∗ Droop and metering CTs have a burden of less than 1 VA; cross-current is less than 3 VA.

Cross-Current Compensation

Internal Resistor ..... 1 Ω, 50 W
Resistor Terminals..... ID RES+ (33), ID RES– (34)
Current Sensing Terminals ..... ID+ (42), ID– (43)
Relay Output Terminals..... ID RLY (27), ID RLY (28)

Protection Functions

Overexcitation Voltage Protection

Pickup

Range ..... 1 to 200 Vdc
Increment ..... 1 Vdc

Time Delay

Range ..... 0.1 to 30 seconds
Increment ..... 0.1 seconds

Overcurrent Protection

Pickup

Range ..... 10% to 320% of rated generator current
Increment 1%
Accuracy ..... + 2% rated current

Time Delay

Characteristic ..... Inverse per ANSI C50.13 configurable
Increment ..... 0.1 seconds

Undervoltage Protection

Pickup

Range ..... 60% to 100% of rated generator voltage
Increment 1%
Accuracy ..... +2% of rated voltage

Time Delay

Range ..... 0.1 to 300 seconds
Accuracy ..... +0.1 seconds

Overvoltage Protection

Pickup

Range ..... 100 to 140% of rated generator voltage
Increment 1%
Accuracy ..... + 2% of rated voltage

Time Delay

Range ..... 0.1 to 300 seconds
Accuracy ..... + 0.1 seconds

Loss of Sensing Protection

Pickup ..... 50% of rated generator voltage
Time delay..... 0.1 s for normal operation, 1 s during soft start

Loss of PMG Protection

Pickup ..... <30 Vac single-phase, < 50 Vac three-phase or an imbalance greater than 20%
Response time ..... <400 ms

Reverse Vars Protection

Time Delay

Range ..... 0.10 to 300 seconds
Increment ..... 0.1 seconds
Accuracy ..... + 0.1 seconds

Overfrequency and Underfrequency Protection

Pickup

Range ..... 30 to 70 Hz
Increment ..... 0.01 Hz
Accuracy ..... + 2% Hz

Time Delay

Range ..... 0.10 to 300 seconds
Increment ..... 0.1 seconds
Accuracy ..... + 0.1 second

Reverse Power Protection

Pickup:

Range ..... 1 to 100% of rated generator VA
Increments 1%
Accuracy ..... + 0.5% of rated VA

Time Delay:

Range ..... 0.10 to 300 seconds
Accuracy ..... + 0.1 second

Rotating Diode Monitor Protection

Number of Poles

Generator ..... 0 to 24
Brushless exciter ..... 0 to 24
Increment 2
Fault time delay ..... 0.1 to 300 seconds

Open and Shorted Diode Inhibit Levels

Range ..... <1.5 Adc Field Current, <45 Hz Generator Frequency, >70 Hz Generator Frequency

Phase Rotation Check Protection

Pickup

Range ..... 67% of rated voltage
Accuracy ..... +2% of rated voltage

Time Delay

Range ..... 1 second
Accuracy ..... +0.1 seconds

Soft Start Function

Setting Range

Soft Start initial voltage ..... 0 to 90% of rated voltage in 1% increments
Soft Start Time ..... 1 to 7,200 seconds in 1 second increments

Voltage Matching

Accuracy ..... Generator rms voltage is matched with the rms bus voltage to within ±0.5% of the generator voltage.

Limiting Functions

Overexcitation Limiting (Online)

Response time ..... <3 cycles

High Limiting

Pickup range ..... 0 to 30.0 Adc
Pickup increment..... 0.1 Adc
Time range ..... 0 to 60 seconds
Time increment..... 1 second

Medium Limiting

Pickup range ..... 0 to 20.0 Adc
Pickup increment..... 0.1 Adc
Time range ..... 0 to 120 seconds
Time increment..... 1.0 second

Low Limiting

Pickup range ..... 0 to 15 Adc
Pickup increment..... 0.1 Adc
Time range ..... Continuous

Overexcitation Limiting (Offline)

Pickup

Range ..... 0 to 15 Adc
Increment ..... 0.1 Adc

Time

Range ..... 0 to 10 seconds
Increment ..... 1 second

Underexcitation Limiting

Adjustment Range:

Real Power..... 0 to 100% kW for each of 5 points
Reactive Power ..... 0 to 100% kvar for each of 5 points

Manual Excitation Control

Range ..... 0 to 15.0 Adc
Increment ..... 0.1 Adc

Metering

Generator Voltage

Range ..... 57 to 208 Vac
Accuracy ..... 0.2% (50/60 Hz)

Generator Current

Range ..... 0 to 5 Aac
Accuracy ..... 0.2% (50/60 Hz)

Generator Frequency

Range ..... 10 to 90 Hz
Accuracy ..... ±0.05 Hz

Bus Voltage

Range ..... 57 to 208 Vac
Accuracy ..... <0.2% (50/60 Hz)

Bus Frequency

Range ..... 10 to 90 Hz
Accuracy ..... ±0.05 Hz

Phase Angle

Range ..... +180°
Accuracy ..... ±1.0°

Field Voltage

Range ..... 0 to 200 Vdc
Accuracy ..... ±1.25 V or ±1.0% (whichever is greater)

Field Current

Range ..... 0 to 30 Adc
Accuracy ..... ±0.15 A or ±1.0% (whichever is greater)

Power Factor

Range ..... –0.5 to +0.5
Accuracy ..... ±0.02

Real Power and Reactive Power

Range ..... 0 to 200% of nominal
Accuracy ..... <0.4% of rated kVA

Load Sharing

Resolution ..... 0.1% of full scale voltage

Environment

Temperature

Operating ..... –40 to +70°C (–40 to +158°F)
Storage ..... –40 to +85°C (–40 to +185°F)

Humidity

Operating ..... 5 to 95% (non-condensing)

Type Tests

Shock

Operating ..... 30 G
Non-Operating..... 50 G in 3 perpendicular planes

Vibration

Operating ..... 10 to 500 Hz, 5.0 G / 0.015 in. max (p-p), 2 hours each axis

Dielectric Strength

Tested per IEEE 421.3

Salt Fog

Tested per MIL-STD-810E, Method 509.3

Agency Certifications

This device is intended to be mounted inside a suitable enclosure providing IP54 minimum.

US and Canada (cULus)

Class I, Division 2, Groups A, B, C, D:

- UL 121201, 9th Edition
- CSA C22.2 No. 213-17, Edition 3

Class I, Zone 2, AEx ic ec [ic] IIC T4; Ex ic ec [ic] IIC T4 Gc:

- UL 60079-0, Edition 7
- UL 60079-7, Edition 5
- UL 60079-11, Edition 6
- CSA C22.2 No. 60079-0, Edition 4
- CSA C22.2 No. 60079-7, Edition 2
- CSA C22.2 No. 60079-11, Edition 2

Europe

Ex ic ec [ic] IIC T4 Gc; Ex II 3 G Ex ic ec [ic] IIC Gc:

- IEC 60079-0, Edition 7
- IEC 60079-7, Edition 5.1
- IEC 60079-11, Edition 6
- EN IEC 60079-0: 2018
- EN 60079-7: 2015
- EN IEC 60079-7: 2015/A1: 2018
- EN 60079-11: 2012

Hazardous Locations Certifications

- IECEx UL 22.0070U
- UL 22 ATEX 2831U
- UL22UKEX2640U
- UL File E532312

WEEE

To help comply with the European Waste Electrical and Electronics Equipment Directive known as WEEE, When the product (bearing the WEEE mark) is found to be non-operational and/or serviceable anymore, this product should not be released into the landfill, but should be handled in accordance to the local Jurisdiction where the product was installed and operational.

CE Compliance

Provided upon request.

RoHS

In its intended use, complies with the requirements of the EC Directive RoHS II 2011/65/EU as amended by 2015/863 and conforms to the following Harmonized Standards: BS EN 50581:2012 / Technical documentation for the assessment of electrical and electronic products with respect to the restriction of hazardous substances.

China RoHS

The following table serves as the declaration of hazardous substances for China in accordance with PRC standard SJ/T 11364-2014. The EFUP (Environmentally Friendly Use Period) for this product is 40 years.

PRODUCT:	DECS-250 CGCM									
	有害物质 Hazardous Substances									
零件名称 Part Name	铅 Lead (Pb)	汞 Mercury (Hg)	镉 Cadmium (Cd)	六价铬 Hexavalent Chromium (Cr^{6+})	多溴联苯 Polybrominated Biphenyls (PBB)	多溴二苯醚 Polybrominated Diphenyl Ethers (PBDE)	邻苯二甲酸二丁酯 Dibutyl Phthalate (DBP)	邻苯二甲酸丁苄酯 Benzyl butyl phthalate (BBP)	邻苯二甲酸二酯 Bis(2-ethylhexyl) phthalate (BEHP)	邻苯二甲酸二异丁酯 Diisobutyl phthalate (DIBP)
金属零件 Metal parts	O	O	O	O	O	O	O	O	O	O
聚合物 Polymers	O	O	O	O	O	O	O	O	O	O
电子产品 Electronics	X	O	O	O	O	O	O	O	O	O
电缆和互连配件 Cables & interconnect accessories	X	O	O	O	O	O	O	O	O	O
绝缘材料 Insulation material	O	O	O	O	O	O	O	O	O	O

本表格依据 SJ/T11364 的规定编制。

O: 表示该有害物质在该部件所有均质材料中的含量均在 GB/T 26572 规定的限量要求以下。

X: 表示该有害物质至少在该部件的某一均质材料中的含量超出 GB/T 26572 规定的限量要求。

This form was prepared according to the provisions of standard SJ/T11364.

O: Indicates that the hazardous substance content in all homogenous materials of this part is below the limit specified in standard GB/T 26252.

X: Indicates that the hazardous substance content in at least one of the homogenous materials of this part exceeds the limit specified in standard GB/T 26572.

Schedule of Limitations

- Mount this equipment in an enclosure with a minimum ingress protection rating of at least IP54 (as defined in EN/IEC 60079-0) and used in an environment of not more than Pollution Degree 2 (as defined in EN/IEC 60664-1) when applied in ATEX/IECEx Zone 2 environments.
- Mount this equipment in an enclosure with a minimum ingress protection rating of at least IP54 (as defined in UL/CSA 60079-0) and used in an environment of not more than Pollution Degree 2 (as defined in IEC 60664-1) when applied in USA/Canada Zone 2 environments.
- At an ambient temperature of 70°C, the device has a maximum temperature rise measurement of 46°C under normal operation.
- Transient protection limiting transient to 140% of rated voltage must be provided.
- Do not connect or disconnect components unless power has been switched off.

Physical Characteristics

For product dimensions, refer to the *Installation* chapter.

Product weight is 6.62 kg (14.6 lb.)

9 • Time Overcurrent Curves

Introduction

The DECS-250 generator overcurrent (51) function provides time/current characteristic curves that closely emulate most of the common electromechanical induction disk relays manufactured in North America. To further improve relay coordination, selection of integrated reset or instantaneous reset characteristics is also provided.

Curve Specifications

Sixteen inverse time functions and one fixed time function are available in the DECS-250.

Curve Definitions

Characteristic curves for the inverse and definite time functions are defined by Equations A-1 and A-2. These equations comply with IEEE Standard C37.112-1996.

$$T_t = \frac{A \times D}{M^N - c} + B \times D + K$$

Equation 9-1. Time-to-Trip Equation

$$T_R = \frac{RD}{|M^2 - 1|}$$

Equation 9-2. Time-to-Reset Equation

Equation Definitions

T_T ..... time to trip when M = 1
T_R ..... time to reset if integrating reset is selected and M < 1. Otherwise, reset is 50 ms or less.
D ..... time dial setting (0.0 to 9.9)
M ..... multiple of pickup setting (0 to 40)
A, B, C, N, K ..... constants for the particular curve
R ..... constant defining the reset time

Curve Constants

Time overcurrent characteristic curve constants are listed in Table 9-1.

Table 9-1. Overcurrent Time Characteristic Curve Constants

Curve Selection	Curve Name	Trip Characteristic Constants					Reset
		A	B	C	N	K	R
1	S, Short Inverse	0.2663	0.03393	1.000	1.2969	0.028	0.5000
2	S2, Short Inverse	0.0286	0.02080	1.000	0.9844	0.028	0.0940
3	L1, Long Inverse	5.6143	2.18592	1.000	1.000	0.028	15.750
4	L2, Long Inverse	2.3955	0.00000	1.000	0.3125	0.028	7.8001
5	D, Definite Time	0.4797	0.21359	1.000	1.5625	0.028	0.8750
6	M, Moderately Inverse	0.3022	0.12840	1.000	0.5000	0.028	1.7500
7	I, Inverse Time	8.9341	0.17966	1.000	2.0938	0.028	9.0000
8	Inverse Time	0.2747	0.10426	1.000	0.4375	0.028	0.8868

Curve Selection	Curve Name	Trip Characteristic Constants					Reset
		A	B	C	N	K	R
9	V, Very Inverse	5.4678	0.10814	1.000	2.0469	0.028	5.5000
10	V2, Very Inverse	4.4309	0.09910	1.000	1.9531	0.028	5.8231
11	Extremely Inverse	7.7624	0.02758	1.000	2.0938	0.028	7.7500
12	E2, Extremely Inverse	4.9883	0.01290	1.000	2.0469	0.028	4.7742
13	Standard Inverse	0.01414	0.00000	1.000	0.0200	0.028	2.0000
14	B, Very Inverse (I^2t)	1.4636	0.00000	1.000	1.0469	0.028	3.2500
15	Extremely Inverse (I^2t)	8.2506	0.00000	1.000	2.0469	0.028	8.0000
16	Long Time Inverse (I^2t)	12.1212	0.00000	1.000	1.0000	0.028	29.0000
17	Fixed Time	0.0000	1.00000	1.000	0.0000	0.028	1.0000

Timing Accuracy

Overcurrent protection timing accuracy is within ±1.5 cycles (F/R response) or –1.5, +3 cycles (A response), whichever is greater. This accuracy applies to:

- Time dial settings (D) greater than 0.1,
- Multiples of 2 to 40 times the pickup setting, and
- Current values not over 150 A for 5 Aac nominal sensing or not over 30 A for 1 Aac nominal sensing.

Time Overcurrent Characteristic Curve Graphs

DECS-250 overcurrent characteristic curves are shown in Figure 9-1 through 9-16. Equivalent time dial settings were calculated at a value of five times pickup.

Table 9-2 cross-references each curve to existing electromechanical relay characteristics.

Table 9-2. Characteristic Curve Cross-Reference

Curve	Curve Name	Figure	Similar To
1	S, Short Inverse	Figure 9-1	ABB CO-2
2	S2, Short Inverse	Figure 9-2	GE IAC-55
3	L1, Long Inverse	Figure 9-3	ABB CO-5
4	L2, Long Inverse	Figure 9-4	GE IAC-66
5	D, Definite Time	Figure 9-5	ABB CO-6
6	M, Moderately Inverse	Figure 9-6	ABB CO-7
7	I, Inverse Time	Figure 9-7	ABB CO-8
8	Inverse Time	Figure 9-8	GE IAC-51
9	V, Very Inverse	Figure 9-9	ABB CO-9
10	V2, Very Inverse	Figure 9-10	GE IAC-53
11	Extremely Inverse	Figure 9-11	ABB CO-11
12	E2, Extremely Inverse	Figure 9-12	GE IAC-77
13	Standard Inverse	Figure 9-13	BS, IEC Standard Inverse
14	B, Very Inverse (I^2t)	Figure 9-14	BS, IEC Very Inverse (I^2t)
15	Extremely Inverse (I^2t)	Figure 9-15	BS, IEC Extremely Inverse (I^2t)
16	Long Time Inverse (I^2t)	Figure 9-16	BS, IEC Long Time Inverse
17	Fixed Time	N/A	N/A

Time Dial Setting Cross-Reference

Although the time characteristic curve shapes were optimized, DECS-250 time dial settings are not identical to the settings of electromechanical induction disk overcurrent relays.

Table 9-3 helps you convert the time dial settings of induction disk relays to the equivalent setting for the DECS-250.

Table 9-3. Time Dial Settings Cross-Reference

Curve	Equivalent To	Electromechanical Relay Time Dial Setting											
		0.5	1.0	2.0	3.0	4.0	5.0	6.0	7.0	8.0	9.0	10.0	11.0
		Basler Electric Equivalent Time Dial Setting											
1	ABB CO-2	0.3	0.8	1.7	2.4	3.4	4.2	5.0	5.8	6.7	7.7	8.6	9.7
3	ABB CO-5	0.4	0.8	1.5	2.3	3.3	4.2	5.0	6.0	7.0	7.8	8.8	9.9
5	ABB CO-6	0.5	1.1	2.0	2.9	3.7	4.5	5.0	5.9	7.2	8.0	8.9	10.1
6	ABB CO-7	0.4	0.8	1.7	2.5	3.3	4.3	5.3	6.1	7.0	8.0	9.0	9.8
7	ABB CO-8	0.3	0.7	1.5	2.3	3.2	4.0	5.0	5.8	6.8	7.6	8.7	10.0
9	ABB CO-9	0.3	0.7	1.4	2.1	3.0	3.9	4.8	5.7	6.7	7.8	8.7	9.6
11	ABB CO-11	0.3	0.7	1.5	2.4	3.2	4.2	5.0	5.7	6.6	7.8	8.5	10.3
8	GE IAC-51	0.6	1.0	1.9	2.7	3.7	4.8	5.7	6.8	8.0	9.3	10.6	
10	GE IAC-53	0.4	0.8	1.6	2.4	3.4	4.3	5.1	6.3	7.2	8.4	9.6	
2	GE IAC-55	0.2	1.0	2.0	3.1	4.0	4.9	6.1	7.2	8.1	8.9	9.8	
4	GE IAC-66	0.4	0.9	1.8	2.7	3.9	4.9	6.3	7.2	8.5	9.7	10.9	
12	GE IAC-77	0.5	1.0	1.9	2.7	3.5	4.3	5.2	6.2	7.4	8.2	9.9	

The DECS-250 has a maximum time dial setting of 9.9. The DECS-250's equivalent time dial setting for the electromechanical maximum setting is listed in Table 9-3 even if it exceeds 9.9. This allows interpolation as noted above.

DECS-250 time-current characteristics are determined by a linear mathematical equation. The induction disk of an electromechanical relay has a certain degree of nonlinearity due to inertial and friction effects. For this reason, even though every effort has been made to provide characteristic curves with minimum deviation from the published electromechanical curves, slight deviations can exist between them.

In applications where the time coordination between curves is extremely close, we recommend that you choose the optimal time dial setting through inspection of the coordination study.

Voltage Restraint

When Voltage Restraint mode is enabled and the generator voltage is between 100% and 25% of nominal voltage, the DECS-250 automatically reduces the selected overcurrent setpoint linearly according to the following formula:

$$Adjusted\ Overcurrent\ Setpoint = Original\ Overcurrent\ Setpoint \times \frac{Generator\ Voltage}{Voltage\ REstraint\ Setpoint}$$

The voltage restraint setpoint range is 0 to 200%. A setting of zero disables voltage restraint.

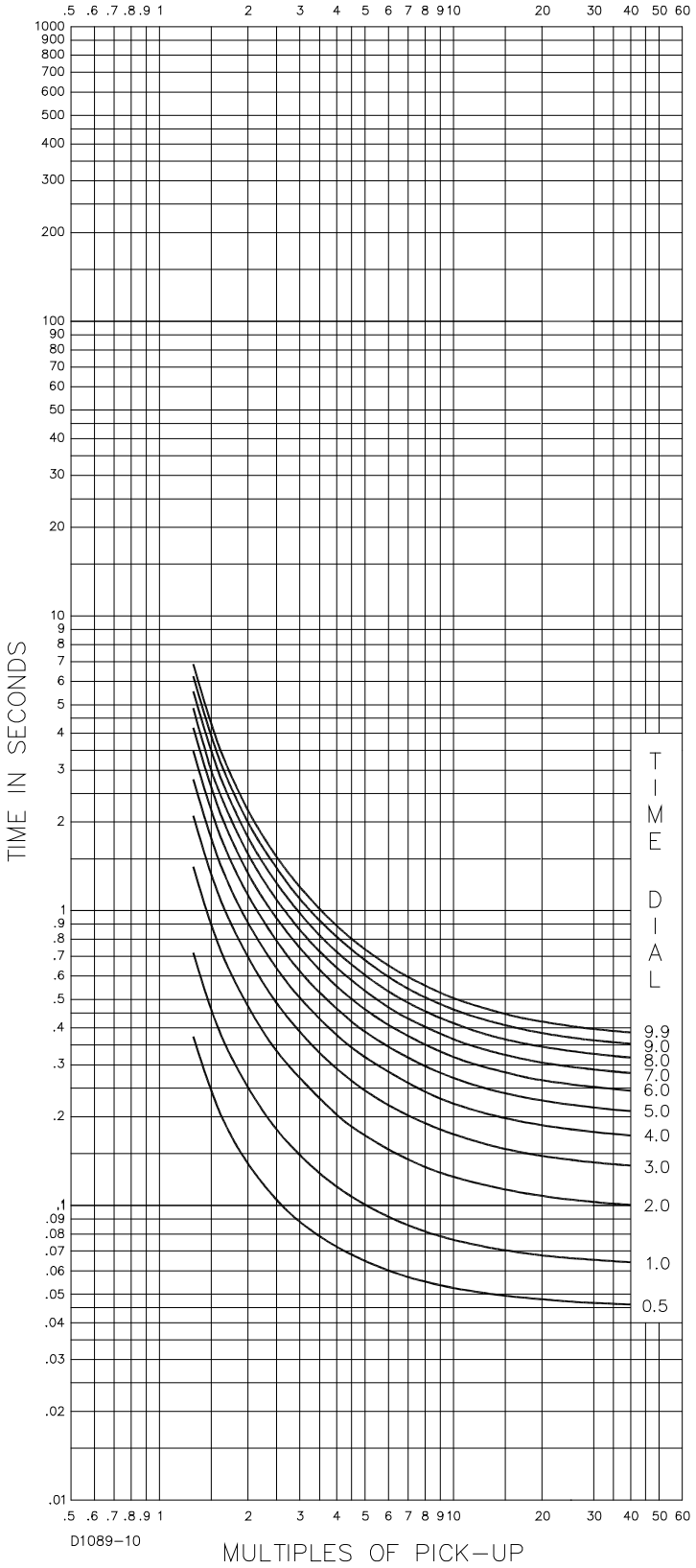

Figure 9-1. Curve S, S1, Short Inverse (Similar to ABB CO-2)

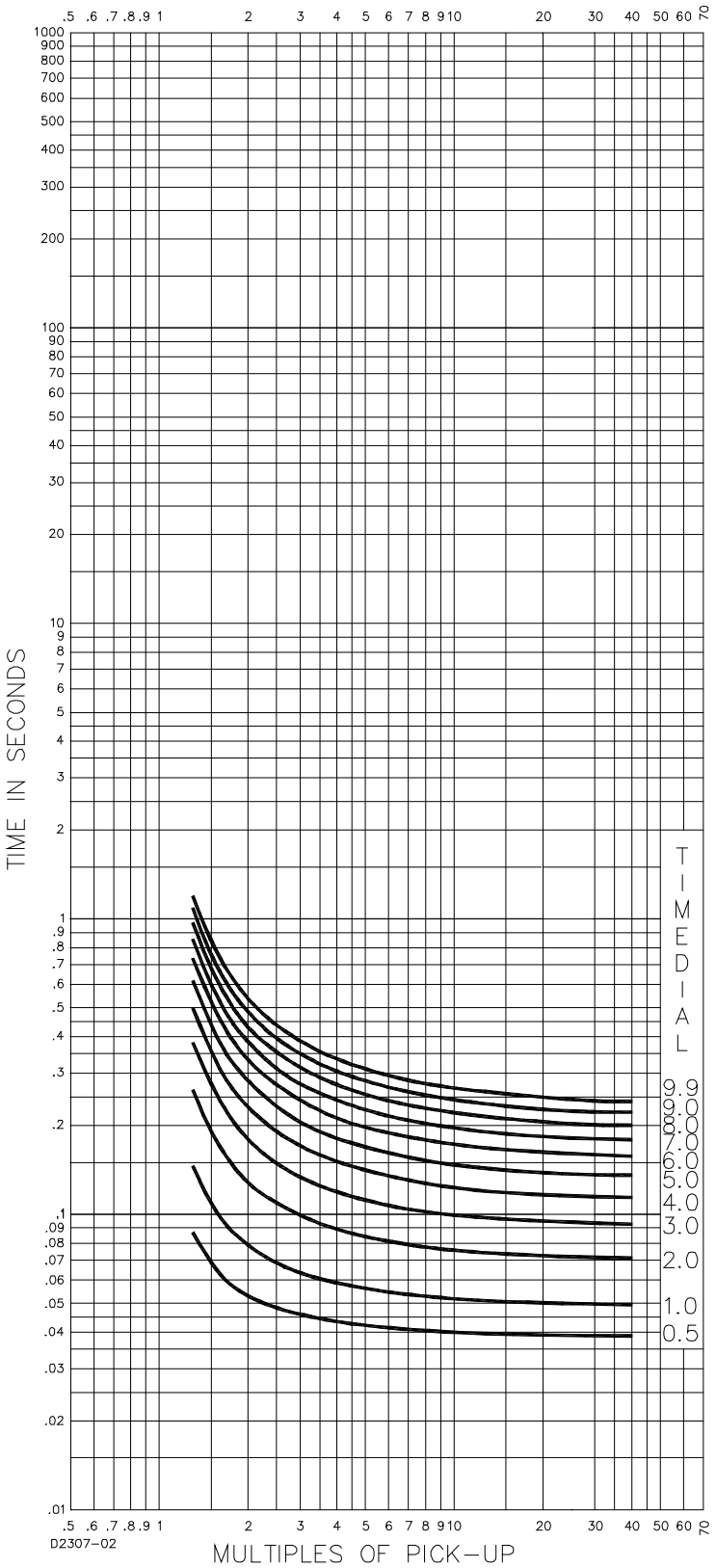

Figure 9-2. Curve S2, Short Inverse (Similar to GE IAC-55)

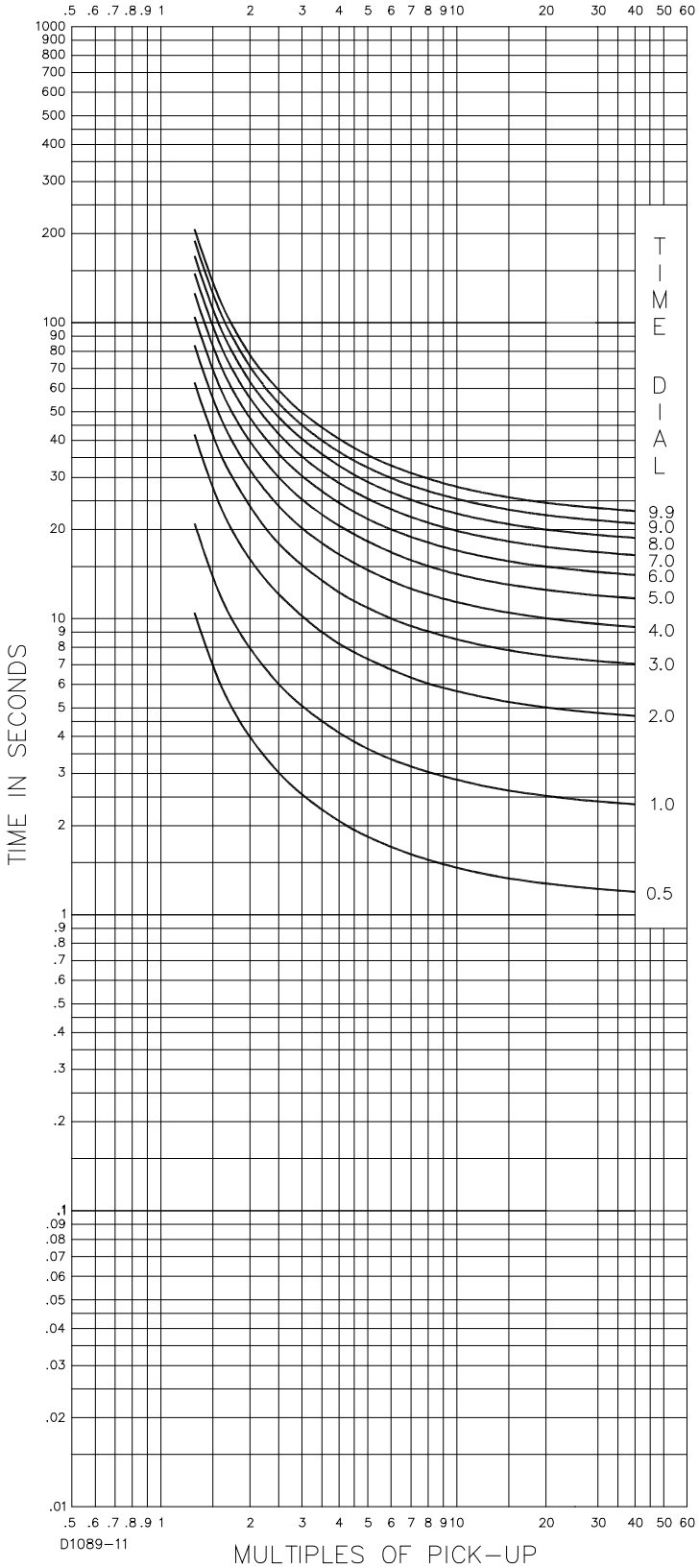

Figure 9-3. Curve L, L1, Long Inverse (Similar to ABB CO-5)

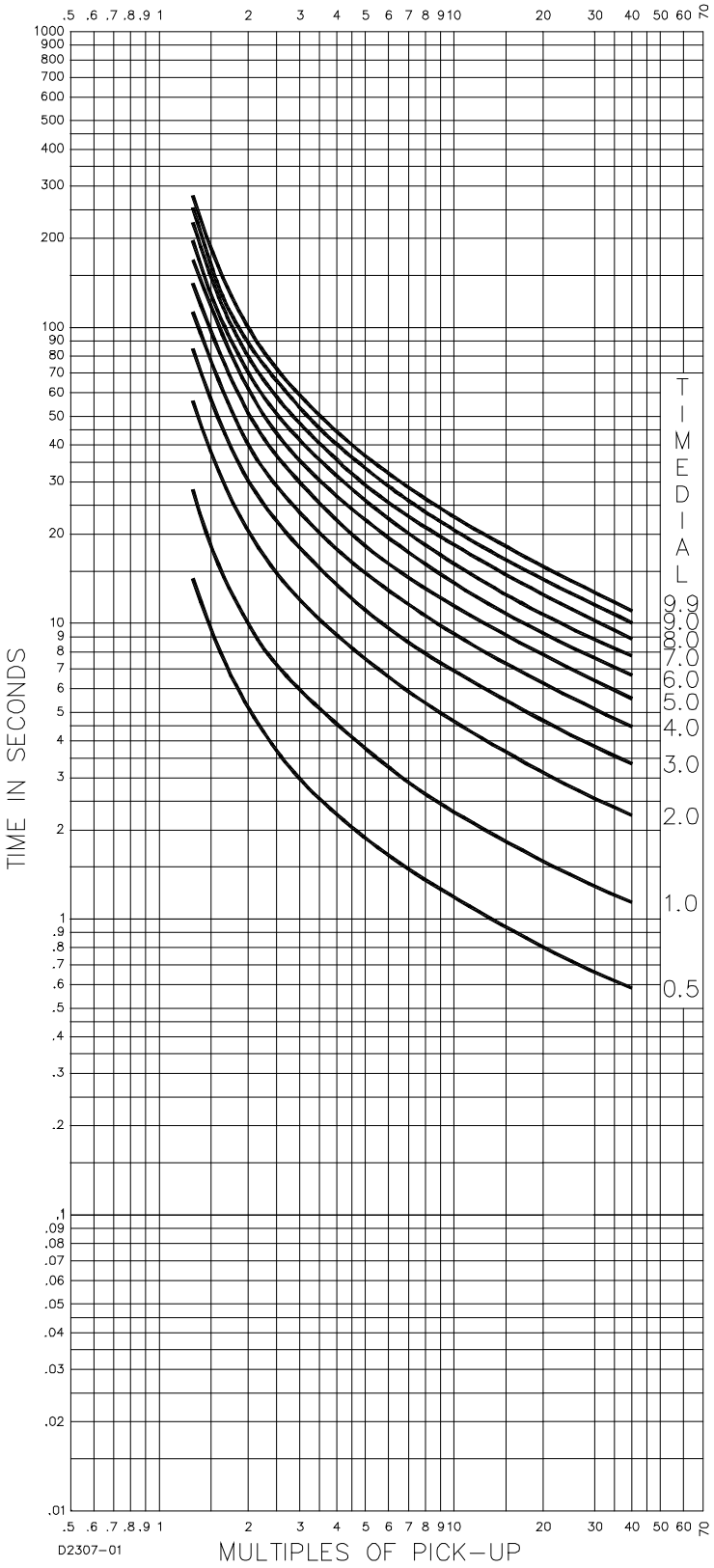

Figure 9-4. Curve L2, Long Inverse (Similar to GE IAC-66)

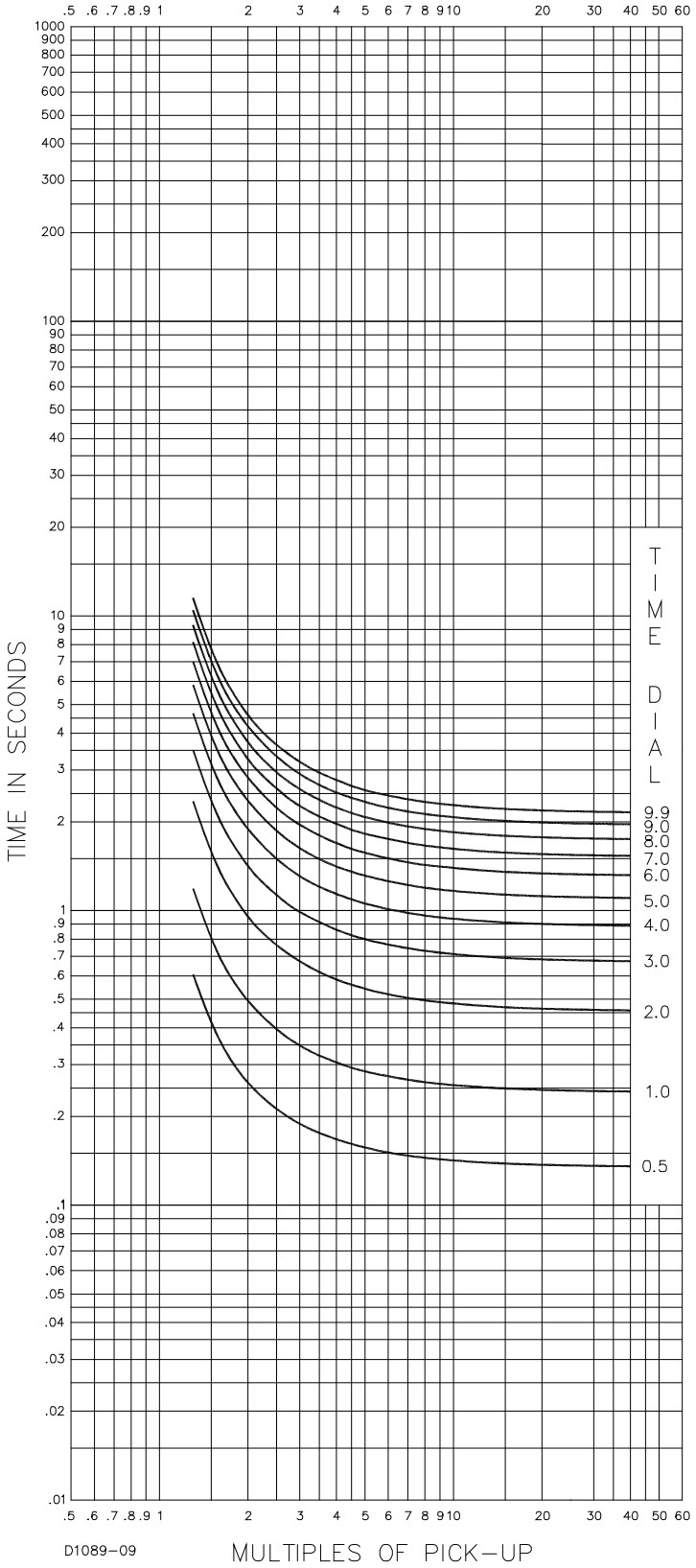

Figure 9-5. Curve D, Definite Time (Similar to ABB CO-6)

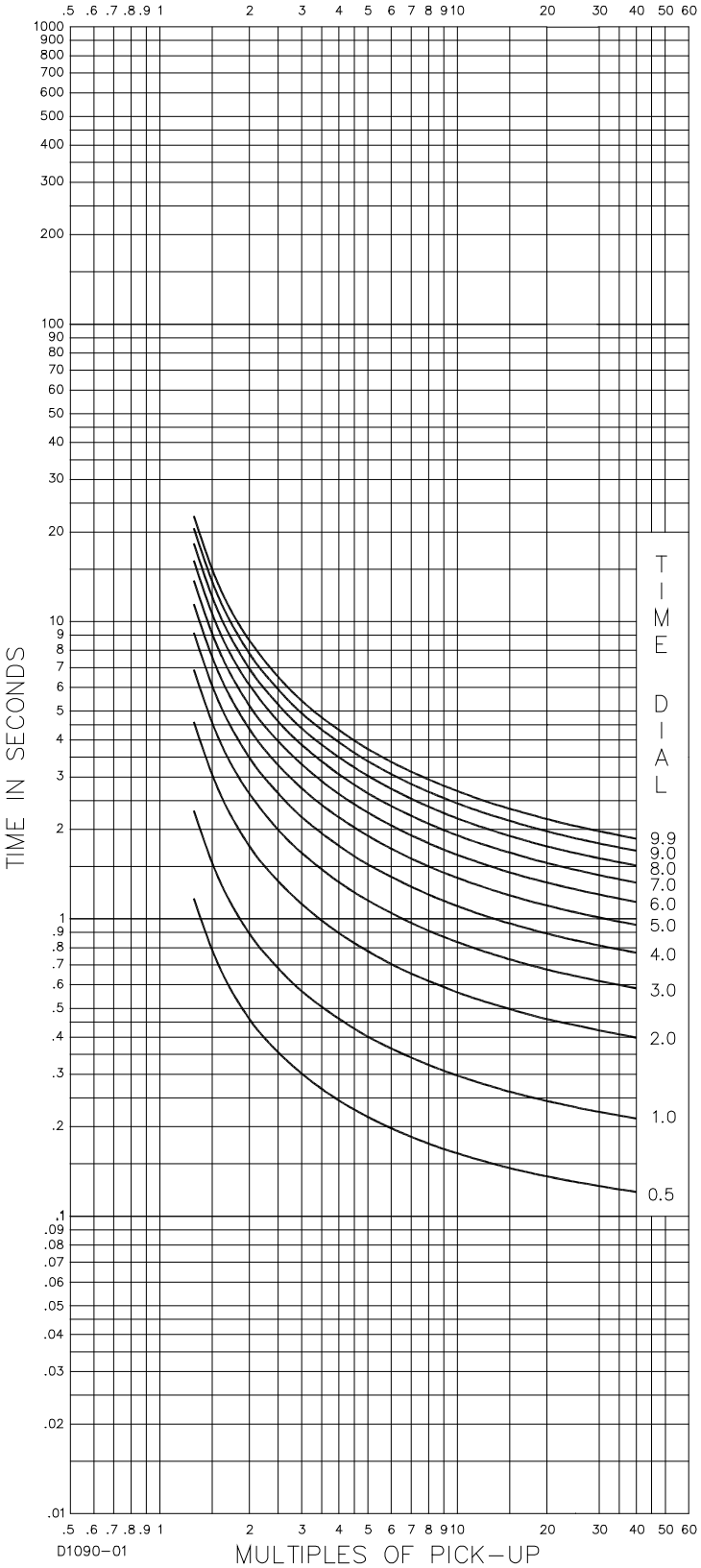

Figure 9-6. Curve M, Moderately Inverse (Similar to ABB CO-7)

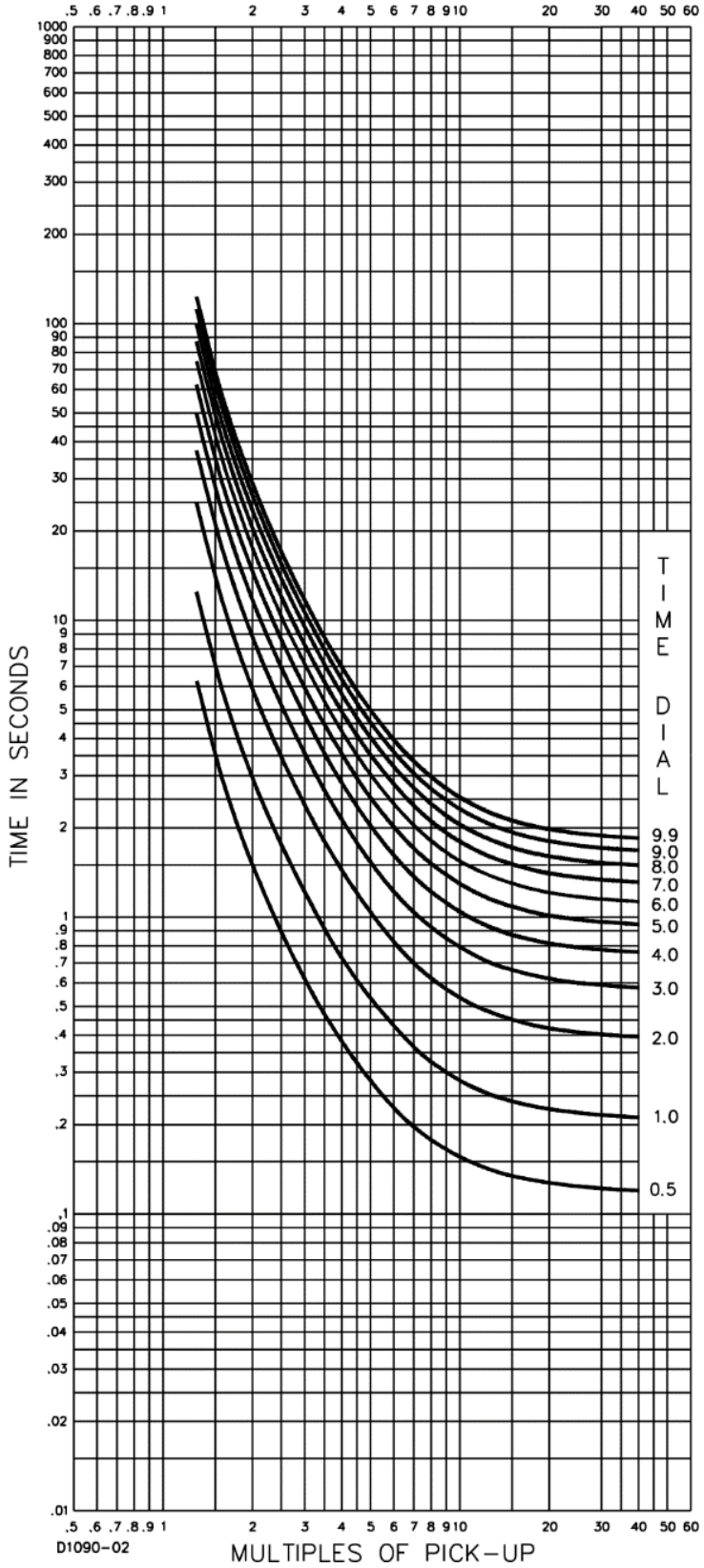

Figure 9-7. Curve I, I1, Inverse Time (Similar to ABB CO-8)

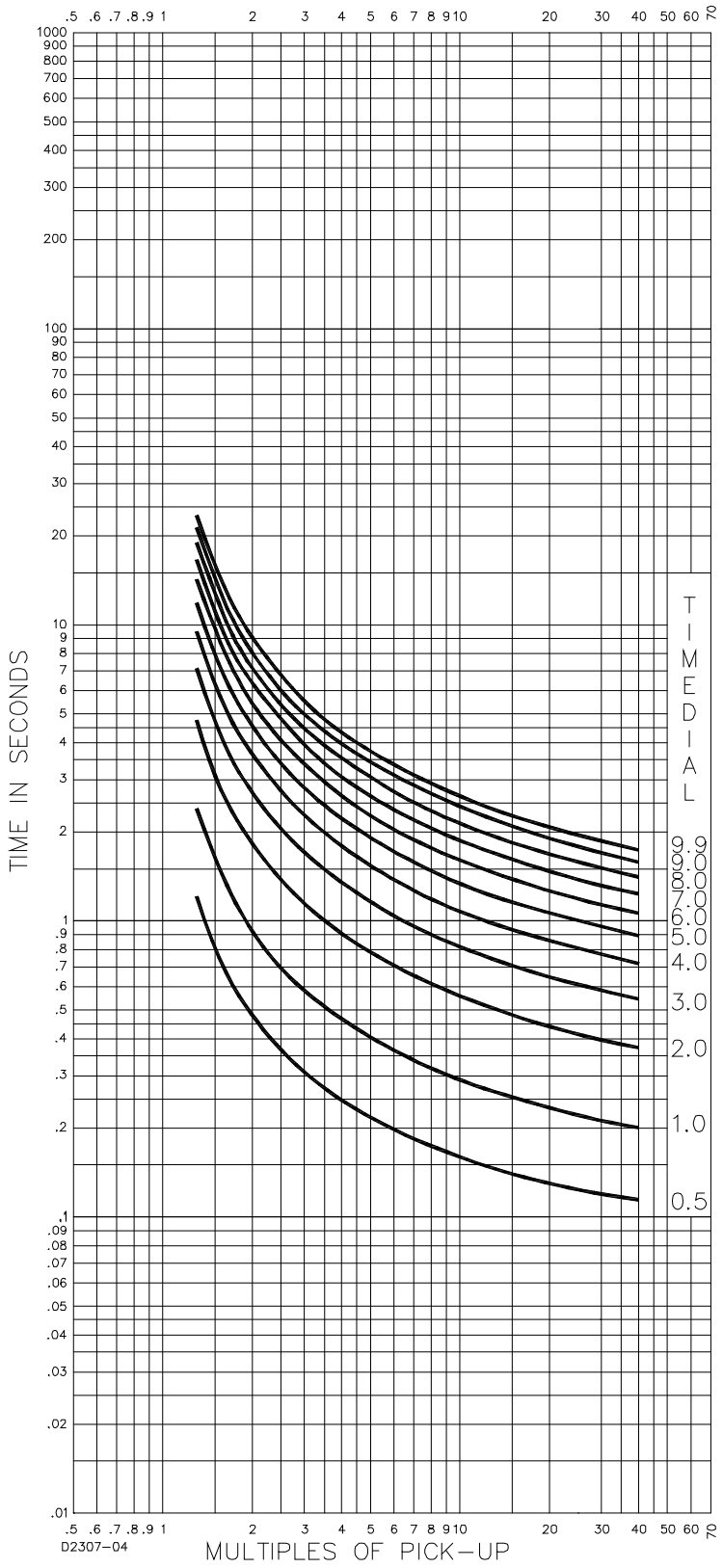

Figure 9-8. Curve I2, Inverse Time (Similar to GE IAC-51)

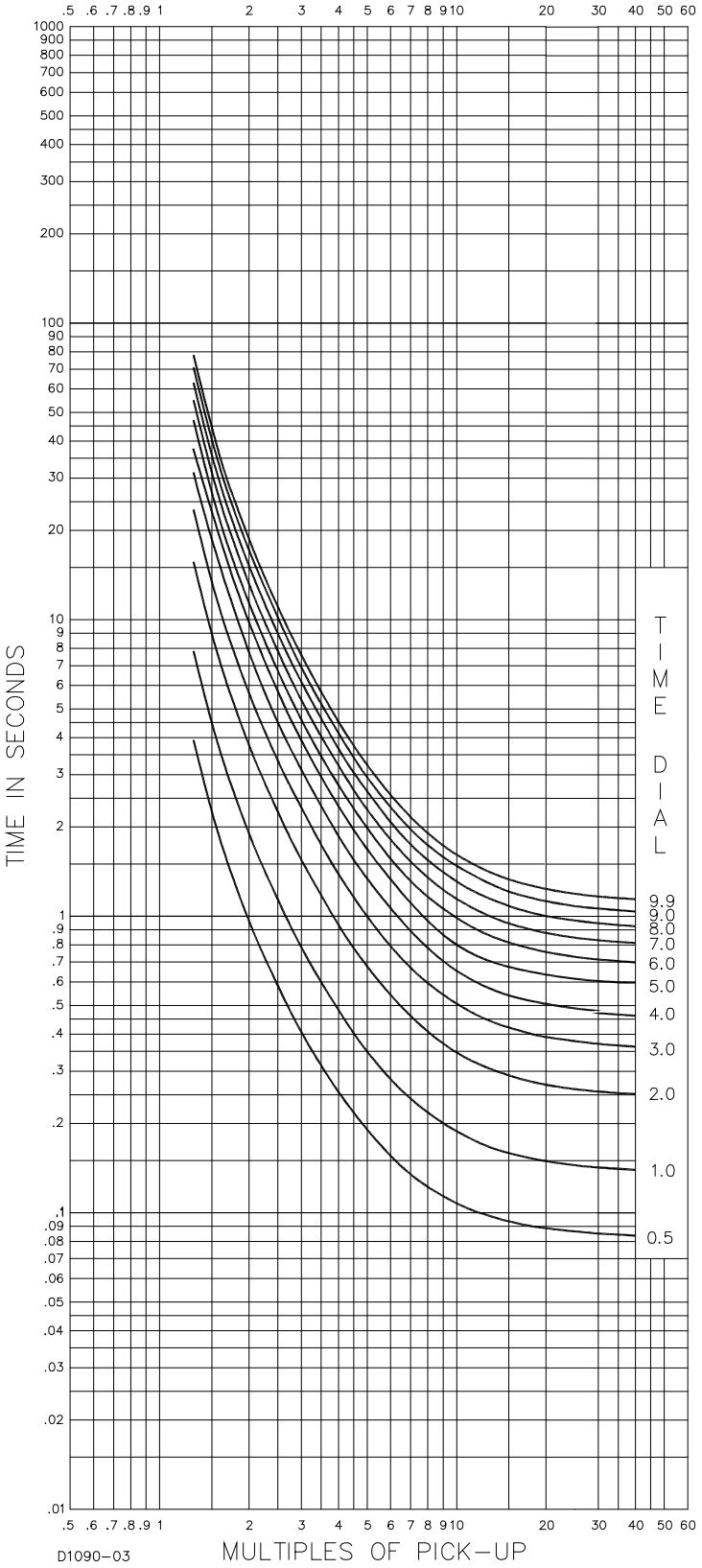

Figure 9-9. Curve V, V1, Very Inverse (Similar to ABB CO-9)

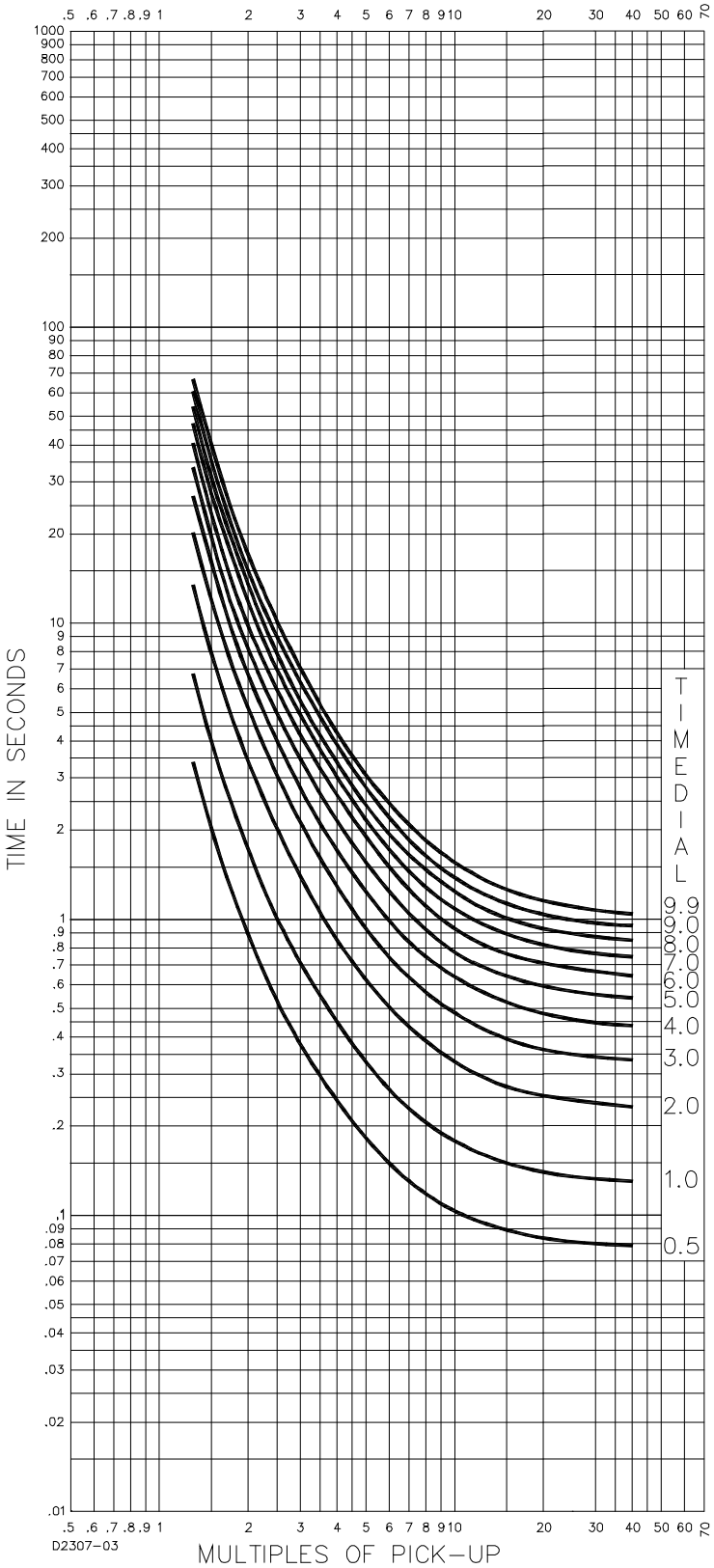

Figure 9-10. Curve V2, Very Inverse (Similar to GE IAC-53)

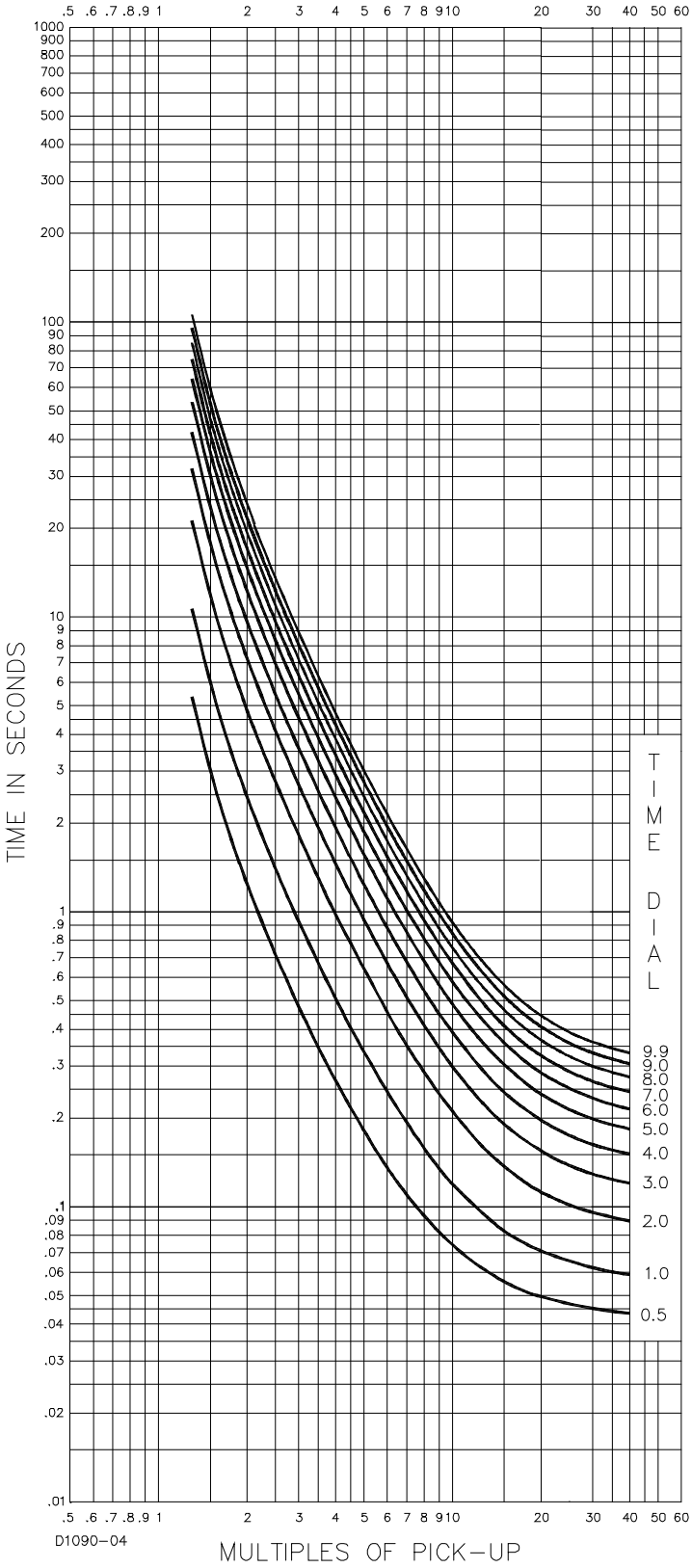

Figure 9-11. Curve E, E1, Extremely Inverse (Similar to GE IAC-11)

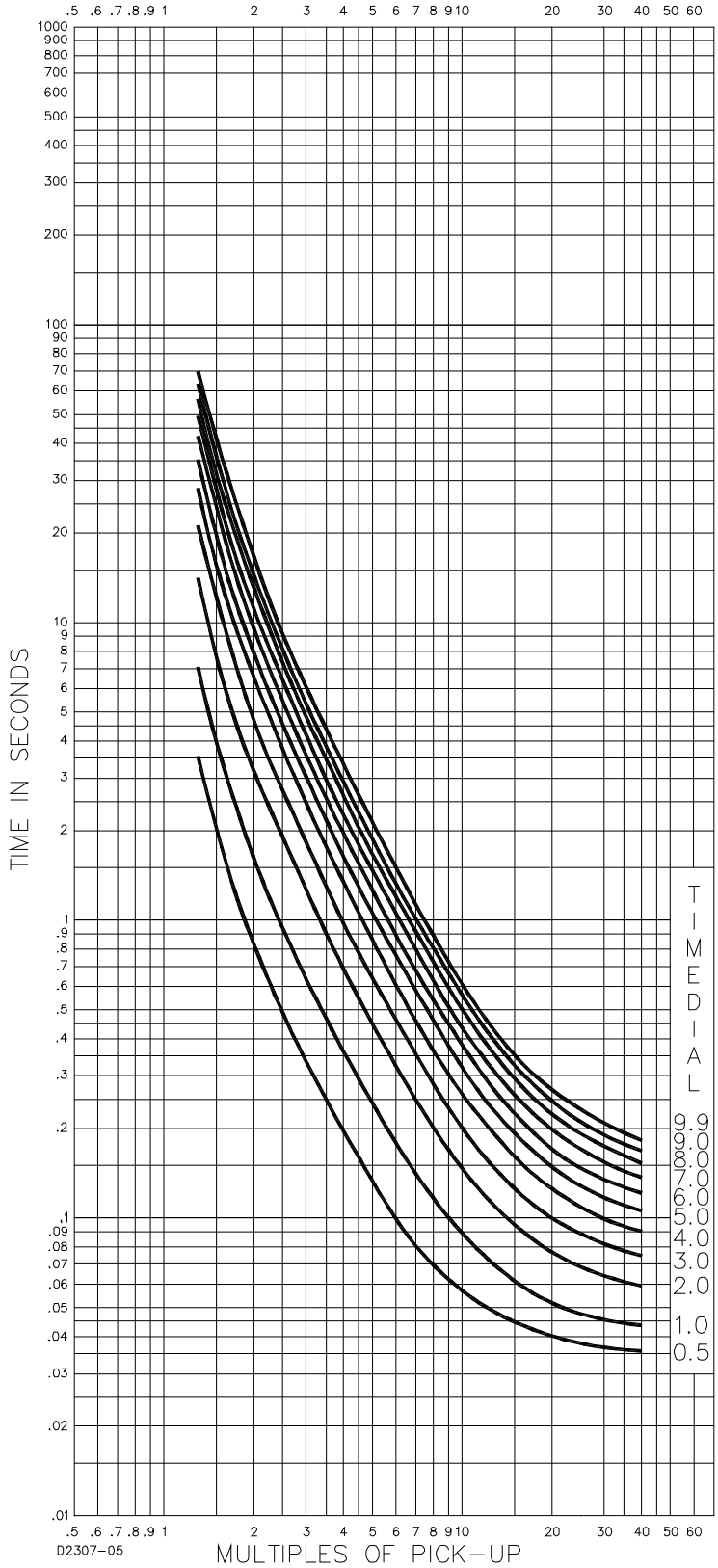

Figure 9-12. Curve E2, Extremely Inverse (Similar to GE IAC-77)

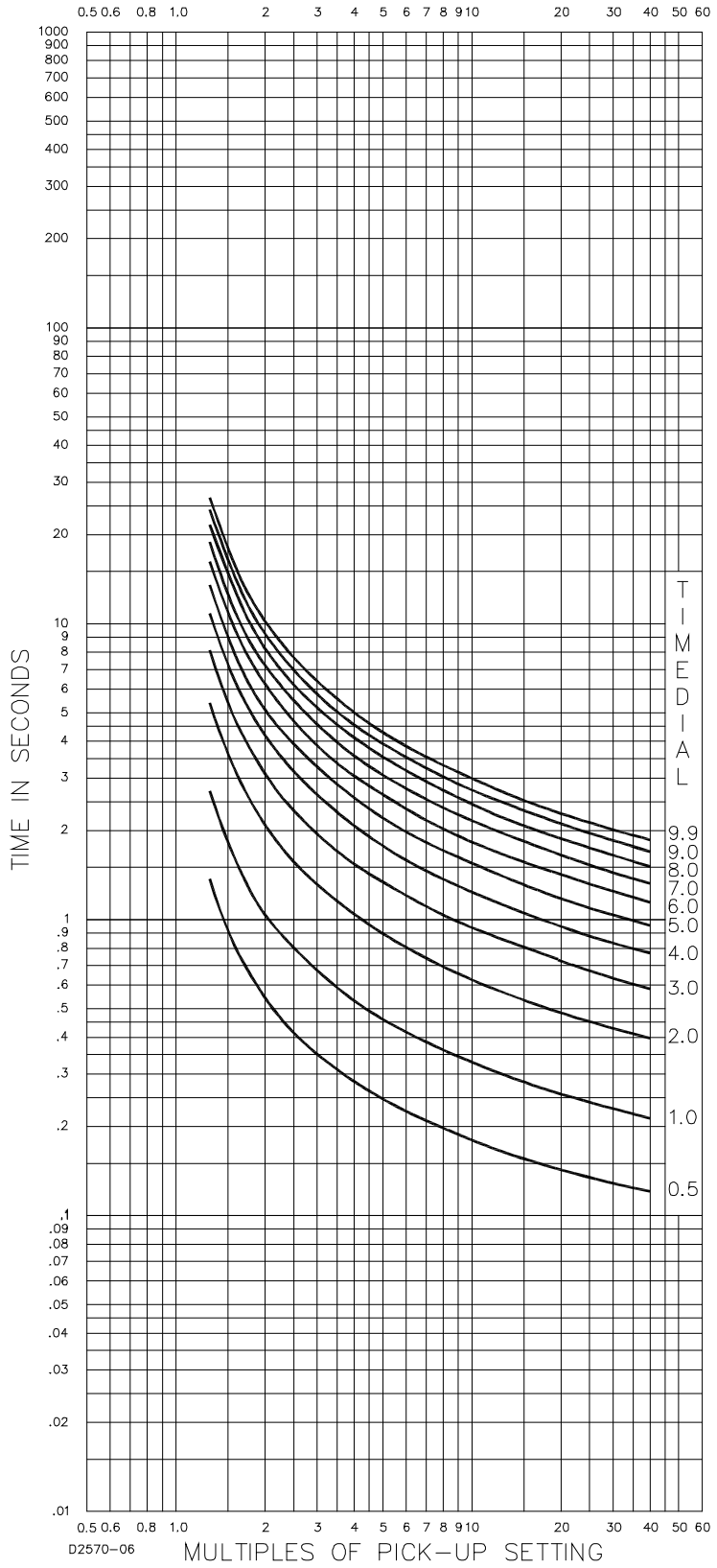

Figure 9-13. Curve A, Standard Inverse

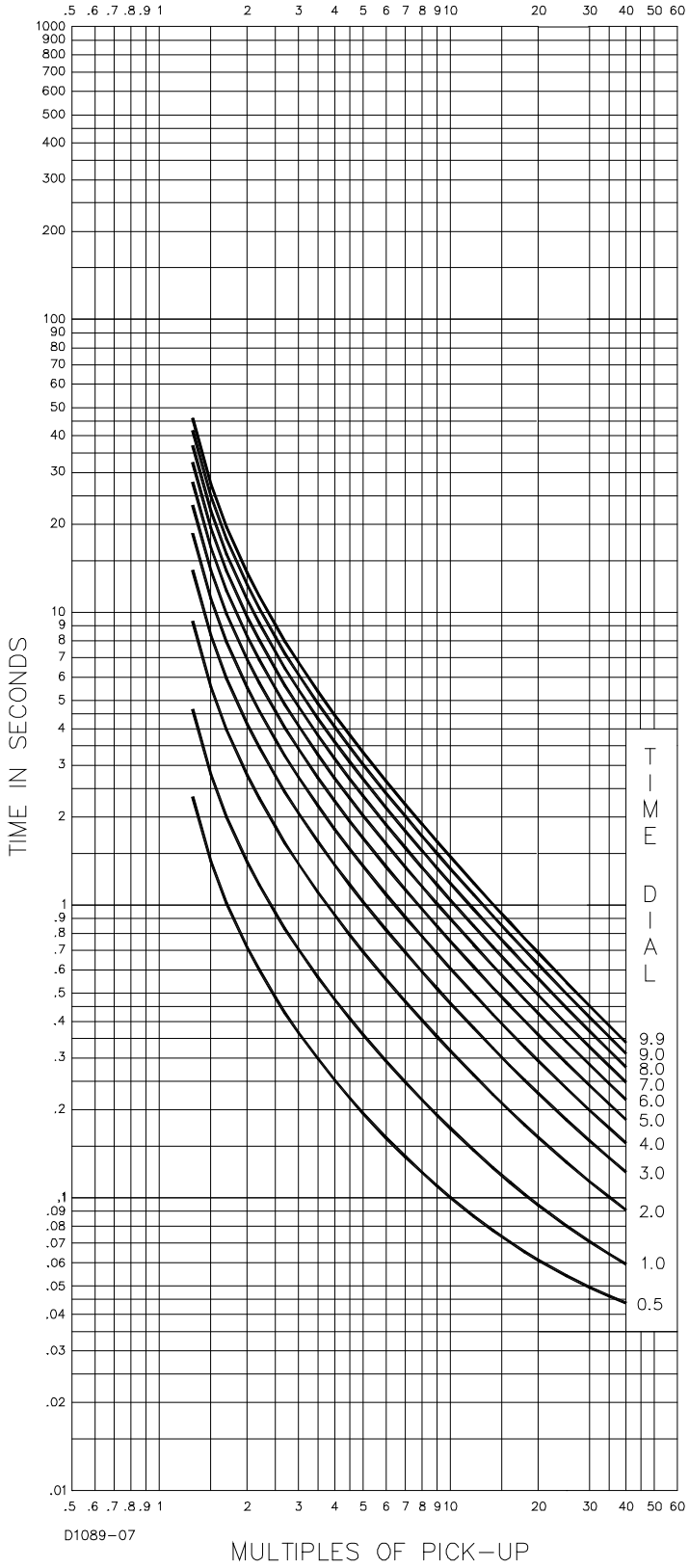

Figure 9-14. Curve B, Very Inverse

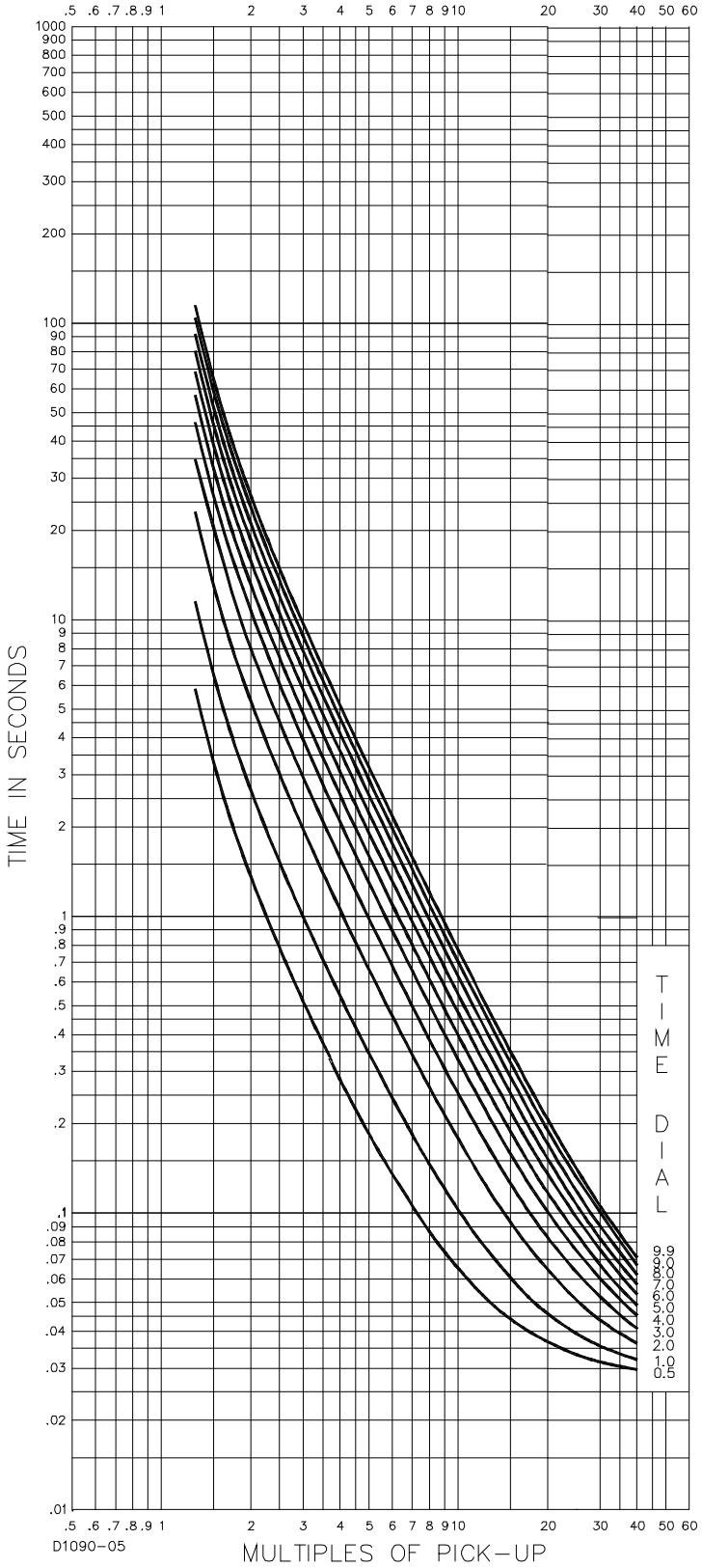

Figure 9-15. Curve C, Extremely Inverse

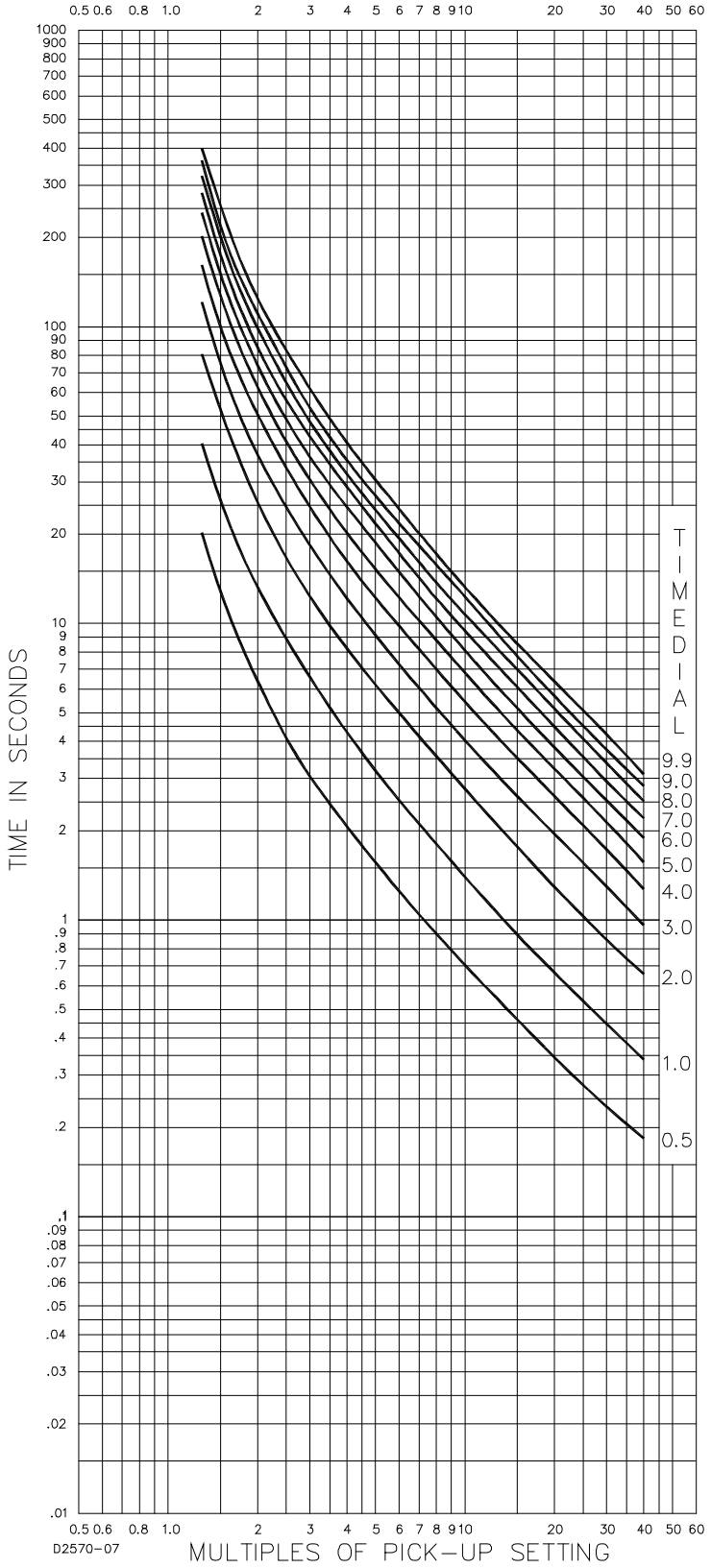

Figure 9-16. Curve G, Long Time Inverse

10 • ControlNet® Application Objects

In addition to the standard adapter class ControlNet core objects, the DECS-250 also supports the following application-specific objects:

- Identity object
- Assembly object

Data Types

Table 10-1 lists the ControlNet and Logix controller data types used by the DECS-250.

Table 10-1. ControlNet Data Types

BOOL	Boolean
SINT	8-bit (byte) value
USINT	8-bit unsigned value
INT	16-bit signed value
UINT	16-bit unsigned value
DINT	32-bit signed value
UDINT	32-bit unsigned value
REAL	32-bit floating point value

All data is stored in Little Endian format (least significant byte first). This is assumed for all data and structure formats described here that do not have the storage format specifically defined.

All integers and double integers are displayed in decimal format.

Identity Object (Class Code 0x01)

The Identity Object provides identification information about the device.

Identity Class Instance (Instance 0)

Instance 0 of any ControlNet object represents the class itself.

The Get Attributes All service for instance 0 of the Identity Object returns the information listed in Table 10-2.

Table 10-2. Get Attributes All (Service Code 0x01)

Name	Attr ID	Data Type	Value
Revision	1	UINT	1
Max Instance	2	UINT	2
Max ID Number of Class Attributes	6	UINT	0
Max ID Number of Instance Attributes	7	UINT	0

Identity Object Instance 1 (DECS-250 Device Instance

Instance 1 of the Identity Object represents the DECS-250 device.

The Get Attributes All service for instance 1 of the Identity Object returns the information listed in Table 10-3.

Table 10-3. Get Attributes All (Service Code 0x01)

Name	Attr ID	Data Type	Value
Vendor Id	1	UINT	1 (AB)
Device Type	2	UINT	115 or 0x73 (Rockwell Automation Misc)
Product Code	3	UINT	59 or 0x03B
Revision	4	USINT[2]	Major, Minor (example 4, 25)
Status	5	WORD	See Table 41 Device Status
Serial Number	6	UDINT	Unique device serial number, factory assigned
Product Name	7	CHAR[]	DECS-250

Identity Object Instance 2 (Communication Module Device Instance)

Instance 2 of the Identity Object represents the ControlNet communication module.

The Get Attributes All service for instance 2 of the Identity Object returns the information listed in Table 10-4 and Table 10-5.

Table 10-4. Get Attributes All (Service Code 0x01)

Name	Attr ID	Data Type	Value
Vendor Id	1	UINT	90 or 0x5A (HMS Industrial Networks)
Device Type	2	UINT	12 or 0x0C (Rockwell Automation Misc.) 43 or 0x2B (Generic Device, Keyable)
Product Code	3	UINT	55 or 0x37
Revision (Major, Minor)	4	USINT[2]	Major, Minor (example 1,11)
Status	5	WORD	See Table 41 Device Status
Serial Number	6	UDINT	Unique device serial number
Product Name	7	CHAR[]	ControlNet

Table 10-5. Device Status

Bit	Name
0	Module Owned
1	(Reserved)
2	Configured *
3	(Reserved)
4 to 7	Extended Device Status: Value Meaning 0000b Unknown 0010b Faulted I/O connection 0100b Nonvolatile configuration bad 0110b Connection in Run mode 0111b Connection in Idle mode
8	Set for minor recoverable faults
9	Set for minor unrecoverable faults
10	Set for major recoverable faults
11	Set for major unrecoverable faults
12 to 15	(Reserved)

* This bit indicates if the product has other settings than factory-default. The value is set to TRUE if the configured attribute in the application object is set and/or the module's nonvolatile storage is changed from default.

Reset Service Code

The Reset service for instance 1 of the Identity Object requests that a DECS-250's communication reset be performed. If excitation is enabled, the request is denied. If excitation is not enabled, the request is accepted. If a reset is accepted, the DECS-250 resets and communication with the Logix controller is lost. After the reset is complete, the DECS-250 automatically starts communicating and is ready immediately for normal operation based on its previous configuration data.

Table 10-6 lists the recognized ControlNet General Response Codes used in response to a reset request.

Table 10-6. Reset (Service Code 0x05)

Response	Value	Meaning
Object State Conflict	0x0C	A reset cannot be performed (excitation is enabled)

Assembly Object (Class Code 0x04)

The Assembly Object provides application-specific information about a device.

Assembly Class Instance (Instance 0)

Instance 0 of any ControlNet object represents the class itself.

The Get Attributes Single service for instance 0 of the Assembly Object can access the information listed in TABLE.

Name	Attr ID	Data Type	Value
Revision	1	UINT	2
Max Instance	2	UINT	6

Assembly Object Instance 1 Through 6

Refer to the *Software Interface* chapter for information about Assembly Instances 1 through 6 and their related attributes and services.

11 • Tag Descriptions

Generator Parameters and Configuration Status

Generator parameters and configuration status input and output tags are listed and described in Table 11-1 (inputs) and Table 11-2 (outputs).

Table 11-1. Generator Parameters and Configuration Status Input Tags

Tag	Description
GenVT_Pri_V	Rated primary voltage for the generator potential transformers
GenVT_Sec_V	Rated secondary voltage for the generator potential transformers
BusA_VT_Pri_V	Rated primary voltage for the BusA potential transformers
BusA_VT_Sec_V	Rated secondary voltage for the BusA potential transformers
BusB_VT_Pri_V	Rated primary voltage for the BusB potential transformers
BusB_VT_Sec_V	Rated secondary voltage for the BusB potential transformers
GenCT_Pri_I	Rated primary current for the generator current transformers
GenCT_Sec_I	Rated secondary current for the generator current transformers
CCCT_Pri_I	Rated primary current for the cross-current transformers
CCCT_Sec_I	Rated secondary current for the cross-current transformers
GenVT_Config	Wiring configuration of the generator system
BusVT_Config	Wiring configuration of the bus system
GenRated_W	Rated power for the generator
GenRated_V	Rated voltage for the generator
GenRated_I	Rated current for the generator
GenRatedFreq	Rated frequency for the generator
GenRatedExcV	Rated excitation voltage for the generator
GenRatedExcI	Rated excitation current for the generator
PMG_Shunt_Select	Selects whether the DECS-250 receives operating power from the generator terminals (shunt powered) or from a PMG. If PMG is selected, the information for the PMG Phase Select parameter must be provided.
PMG_1Ph_3PhSelect	Configures the applied PMG power as 1-phase or 3-phase

Table 11-2. Generator Parameters and Configuration Status Output Tags

Tag	Description
ConfigRcvd	Reports whether a valid Configuration has been received from the host Logix controller. A 1 indicates a valid configuration. This bit must be a 1 to scheduled data transfers to occur.
UnschdWriteRcvd	Reports whether a valid Unscheduled Write has been received from the host Logix controller. This bit must be a 1 to scheduled data transfers to occur.

General Excitation Control Modes

Excitation control mode input and output tags are listed and described in Table 11-3 (inputs) and Table 11-4 (outputs).

Table 11-3. General Excitation Control Mode Input Tag

Tag	Description
SoftwareExcEn	This tag is controlled by the host Logix controller. If set to 1, it provides one of the necessary conditions for field excitation to be enabled.

Table 11-4. General Excitation Control Mode Output Tags

Tag	Description
Internal_Tracking_En	When this tag is set at 1, the DECS-250 enables internal tracking between the various regulating modes.
InternalTrackRate	Configures the rate at which DECS-250 tracking matches the non-active excitation control modes to the active excitation control mode
InternalTrackDly	Changes the initial delay of the DECS-250 tracking function to prevent the tracing mode from adjusting the non-active modes into an undesirable condition.
HardwareExcEned	Reports the state of the excitation enable input at terminals EX-D+ and EX-D–. Field excitation is disabled when this bit is in the 0 state.
SoftwareExcEned	Reports the state of the **SoftwareExcEn** tag
ExcOut	Reports the state the DECS-250 is commanding the excitation output to take
SetptTraverseActive	Indicates when the DECS-250 is traversing between an internal tracking setpoint established by the internal tracking function and the final setpoint provided by the schedule write data. Traversing occurs when switching from the active regulation mode and any of the other regulating modes.

AVR Mode

AVR mode input and output tags are listed and described in Table 11-5 (inputs) and Table 11-6 (outputs).

Table 11-5. AVR Mode Input Tags

Tag	Description
AVR_FCR_Select	Selects AVR or FCR control
AVRSetpt	Sets the desired voltage setpoint for operating in AVR mode
AVR_FCR_Kp	Sets the Proportional Gain parameter for AVR and FCR modes
AVR_FCR_Ki	Sets the Integral Gain parameter for AVR and FCR modes
AVR_FCR_Kd	Sets the Derivative Gain parameter for AVR and FCR modes
AVR_FCR_Td	Sets the filtering time constant for AVR and FCR modes

Tag	Description
AVR_Kg	Adjusts the coarse loop gain and overall gain of the AVR operating mode. It also determines the characteristic of the dynamic response to a change in the generator voltage.
AVR_Traverse_Rate	Determines the time (in seconds) for the setpoint to move from zero to the rated generator voltage. It determines how fast the regulator changes the voltage setpoint from the tracking value to the operating setpoint when the regulator operating mode changes to AVR.
AVR_FCRAuxGain	Adjusts the overall gain of the auxiliary input's control of the AVR/FCR operating mode. Tag units are percent of nominal per volt. A setting of 1 results in the controlled parameter being changed by 1% of the nominal value for each volt applied to the auxiliary input.

Table 11-6. AVR Mode Output Tag

Tag	Description
AVR_FCR_Selection	Reports the selection of AVR or FCR control. (See **AVR_FCR_Select** tag.)

FCR Mode

FCR mode input and output tags are listed and described in Table 11-7 (inputs) and Table 11-8 (outputs).

Table 11-7. FCR Mode Input Tags

Tag	Description
AVR_FCR_Select	Selects AVR or FCR control
FCRSetpt	Sets the desired current setpoint for operating in FCR mode
AVR_FCR_Kp	Sets the Proportional Gain parameter for AVR and FCR modes
AVR_FCR_Ki	Sets the Integral Gain parameter for AVR and FCR modes
AVR_FCR_Kd	Sets the Derivative Gain parameter for AVR and FCR modes
AVR_FCR_Td	Sets the filtering time constant for AVR and FCR modes
FCR_Kg	Adjusts the coarse loop gain and overall gain of the FCR operating mode. It also determines the characteristic of the dynamic response to a change in the generator voltage.
FCR_Traverse_Rate	Determines the time (in seconds) for the setpoint to move from zero to the rated generator voltage. It determines how fast the regulator changes the voltage setpoint from the tracking value to the operating setpoint when the regulator operating mode changes to FCR.
AVR_FCRAuxGain	Adjusts the overall gain of the auxiliary input's control of the AVR/FCR operating mode. Tag units are percent of nominal per volt. A setting of 1 results in the controlled parameter being changed by 1% of the nominal value for each volt applied to the auxiliary input.

Table 11-8. FCR Mode Output Tag

Tag	Description
AVR_FCR_Selection	Reports the selection of AVR or FCR control. (See **AVR_FCR_Select** tag.)

Power Factor Mode

Power Factor mode input and output tags are listed and described in Table 11-9 (inputs) and Table 11-10 (outputs).

Table 11-9. Power Factor Mode Input Tags

Tag	Description
PF_VAR_Select	Selects power factor or reactive power control
PF_VAR_En	When this tag is set at 1, the DECS-250 uses the **PF_VAR_Select** tag to determine its control mode. When this tag is set at 0, the DECS-250 uses the **AVR_FCR_Select** tag to determine its control mode.
PFSetpt	Sets the desired power factor setpoint for operation in PF control mode
PF_Kg	Adjusts the coarse loop gain and overall gain of power factor control. It also determines the characteristic of the dynamic response to a change in generator power factor.
PF_Ki	Sets the Integral Gain for power factor control. This tag determines the characteristic of the dynamic response to a change in the power factor setting.
AVR_FCR_Kd	Sets the Derivative Gain parameter for AVR and FCR modes
PF_Traverse_Rate	Determines the time (in seconds) for the power factor setpoint to move from 0.50 lagging to 0.50 leading or vice versa. It determines how fast the regulator changes the power factor setpoint from the tracking value to the operating setpoint when the regulator operating mode changes to PF.
PF_VARAuxGain	Adjusts the overall gain of the auxiliary input's control of the var/power factor operating modes. Tag units are percent of nominal per volt. A setting of 1 causes the controlled parameter to change by 1% of the nominal value for each volt applied to the auxiliary input. For PF control, the units are 0.01 PF per volt. For example, a setting of 5 results in the regulated PF changing by 0.05 for each volt applied to the auxiliary input.

Table 11-10. Power Factor Mode Input Tags

Tag	Description
PF_VAR_Selection	Reports the selection of power factor or reactive power control. (See **PF_VAR_Select** tag.)
PF_VAR_Control	Reports your selection of PF/var or AVR/FCR control modes

Var Mode

Var mode input and output tags are listed and described in Table 11-11 (inputs) and Table 11-12 (outputs).

Table 11-11. Var Mode Input Tags

Tag	Description
PF_VAR_Select	Selects power factor or reactive power control
PF_VAR_En	When this tag is set at 1, the DECS-250 uses the **PF_VAR_Select** tag to determine its control mode. When this tag is set at 0, the DECS-250 uses the **AVR_FCR_Select** tag to determine its control mode.
VARSetpt	Sets the desired kvar setpoint for operation in var control mode
VAR_Kg	Adjusts the coarse loop gain and overall gain of power factor control. It also determines the characteristic of the dynamic response to a change in generator power factor.
VAR_Ki	Sets the Integral Gain for var control. This tag also determines the characteristic of the dynamic response to a change in the var setting.
VAR_Traverse_Rate	Determines the time (in seconds) for the power factor setpoint to move from zero to the rated generator KVA. It determines how fast the regulator changes the var setpoint from the tracking value to the operating setpoint when the operating mode changes to var regulation.
PF_VARAuxGain	Adjusts the overall gain of the auxiliary input's control of the var/power factor operating modes. Tag units are percent of nominal per volt. A setting of 1 causes the controlled parameter to change by 1% of the nominal value for each volt applied to the auxiliary input. For PF control, the units are 0.01 PF per volt. For example, a setting of 5 results in the regulated PF changing by 0.05 for each volt applied to the auxiliary input.

Table 11-12. Var Mode Output Tags

Tag	Description
PF_VAR_Selection	Reports the selection of power factor or reactive power control. (See **PF_VAR_Select** tag.)
PF_VAR_Control	Reports your selection of PF/var or AVR/FCR control modes

Excitation Control Features

Soft Start Inputs

Soft start input tags are listed and described in Table 11-13.

Table 11-13. Soft Start Input Tags

Tag	Description
SoftStart_InitLevel	Configures the generator voltage that is generated immediately after enabling the DECS-250. This parameter is based on a percentage of the nominal generator voltage.
SoftStartTime	Configures the time it takes to go from the Soft Start Initial Voltage to the nominal generator voltage.

Droop (Reactive Current Compensation) Inputs

Droop input tags are listed and described in Table 11-14.

Table 11-14. Droop Input Tags

Tag	Description
Droop_CCC_Select	If Droop is enabled, this tag selects cross-current compensation when set to 1 or Droop when set to 0.
V_DroopEn	Configures whether Droop is enabled
V_DroopSetpt	Configures the amount of voltage droop that is experienced during paralleled generator applications

Underfrequency Limit Inputs

Underfrequency limit input tags are listed and described in Table 11-15.

Table 11-15. Underfrequency Limit Input Tags

Tag	Description
VperHz_HiKneeFreq	Configures the frequency at which the V/Hz characteristic starts to reduce the generator voltage as a function of generator frequency. The VperHz_HiKneeFreq effectively provides the same functionality as the VperHz_LoKneeFreq, allowing the limiter to be configured with two different operational areas instead of a single one.
VperHz_HiSlope	Configures the rate at which the V/Hz characteristic reduces the generator voltage as a function of generator frequency. The steeper the slope, the faster the prime mover is unloaded and the smaller the frequency variations that are experienced during load applications.
VperHz_LoKneeFreq	Configures the frequency at which the V/Hz characteristic starts to reduce the generator voltage as a function of generator frequency. The VperHz_LoKneeFreq effectively provides the same functionality as the VperHz_HiKneeFreq, allowing the limiter to be configured with two different operational areas instead of a single one.
VperHz_LoSlope	Configures the rate at which the V/Hz characteristic reduces the generator voltage as a function of generator frequency after the lower knee frequency is exceeded.

Cross-Current Compensation Inputs

Cross-current compensation input tags are listed and described in Table 11-16.

Table 11-16. Cross-Current Compensation Input Tags

Tag	Description
Droop_CCC_Select	If Droop is enabled, this tag selects cross-current compensation when set to 1 or Droop when set to 0.
CrossCurrentGain	Adjusts the gain of the cross-current compensation input. The actual value measured by the input is multiplied by this setting. It can be used to improve var sharing between machines connected in cross-current.

Overexcitation Limiter

Overexcitation limiter input and output tags are listed and described in Table 11-17 (inputs) and Table 11-18 (outputs).

Table 11-17. Overexcitation Limiter Input Tags

Tag	Description
OEL_En	Enables overexcitation limiting
OEL_Kg	Adjusts the coarse loop gain of the overexcitation limiter. This tag also determines the response of the limiter to an over-excitation event.
OEL_Ki	Adjusts the proportional gain at which the DECS-250 responds during an overexcitation condition.
OEL_OnLineHiSetpt	Sets the high current level for the online overexcitation limiter. The DECS-250 OEL limits excitation current at this level. Operation at this level is allowed for a time no longer than programmed in the **OEL_OnLineHiTimeDly** tag.
OEL_OnLineHiTimeDly	Sets the amount of time the online overexcitation limiting function lets the DECS-250 operate at the excitation current level programmed in the **OEL_OnLineHiSetpt** tag.
OEL_OnLineMedSetpt	Sets the medium current level for the online overexcitation limiting function. Operation at this level is permitted for a time no longer than programmed in the **OEL_OnLineMedTimeDly** tag.
OEL_OnLineMedTimeDly	Sets the amount of time the online overexcitation limiter allows operation at the excitation current level programmed in the **OEL_OnLineMedSetpt** tag.
OEL_OnLineLoSetpt	Sets the low current level for online overexcitation limiting. Operation at this level is allowed indefinitely.
OEL_OffLineHiSetpt	Sets the high current level for offline overexcitation limiting. The OEL limits excitation current at this level. Operation at this level is permitted for a time no longer than programmed in the **OEL_OffLineHiTimeDly** tag.
OEL_OffLineHiTimeDly	Sets the length of time the offline OEL allows operation at the excitation current level programmed in the **OEL_OffLineHiSetpt** tag.
OEL_OffLineLoSetpt	Sets the low current level for the offline OEL. Operation at this level is permitted indefinitely.

Table 11-18. Overexcitation Limiter Output Tags

Tag	Description
OEL_Active	This tag is set at 1 when the overexcitation limiter is active.

Line-Drop Compensation Input

The line-drop compensation input tag is listed and described in Table 11-19.

Table 11-19. Line-Drop Compensation Input Tag

Tag	Description
LineDropComp	Configures the amount of voltage droop that is experienced during paralleled generator applications

Underexcitation Limiter

Underexcitation limiter input and output tags are listed and described in Table 11-20 (inputs) and Table 11-21 (output).

Table 11-20. Underexcitation Limiter Input Tags

Tag	Description
UEL_En	Enables underexcitation limiting
UEL_Kg	Adjusts the coarse loop gain of the underexcitation limiter. This tag also determines the response of the limiter to an underexcitation event.
UEL_Ki	Adjusts the proportional gain at which the DECS-250 responds during an underexcitation condition.
UEL_Curve_W_Pt1	Used as the watt coordinate in the first watt, var coordinate pair, that, in combination with four other watt, var coordinate pairs, lets you enter an underexcitation limiting curve.
UEL_Curve_W_Pt2	Used as the watt coordinate in the second watt, var coordinate pair, that, in combination with four other watt, var coordinate pairs, lets you enter an underexcitation limiting curve.
UEL_Curve_W_Pt3	Used as the watt coordinate in the third watt, var coordinate pair, that, in combination with four other watt, var coordinate pairs, lets you enter an underexcitation limiting curve.
UEL_Curve_W_Pt4	Used as the watt coordinate in the fourth watt, var coordinate pair, that, in combination with four other watt, var coordinate pairs, lets you enter an underexcitation limiting curve.
UEL_Curve_W_Pt5	Used as the watt coordinate in the fifth watt, var coordinate pair, that, in combination with four other watt, var coordinate pairs, lets you enter an underexcitation limiting curve.
UEL_Curve_VAR_Pt1	Used as the var coordinate in the first watt, var coordinate pair, that, in combination with four other watt, var coordinate pairs, lets you enter an underexcitation limiting curve.
UEL_Curve_VAR_Pt2	Used as the var coordinate in the second watt, var coordinate pair, that, in combination with four other watt,

Tag	Description
	var coordinate pairs, lets you enter an underexcitation limiting curve.
UEL_Curve_VAR_Pt3	Used as the var coordinate in the third watt, var coordinate pair, that, in combination with four other watt, var coordinate pairs, lets you enter an underexcitation limiting curve.
UEL_Curve_VAR_Pt4	Used as the var coordinate in the fourth watt, var coordinate pair, that, in combination with four other watt, var coordinate pairs, lets you enter an underexcitation limiting curve.
UEL_Curve_VAR_Pt5	Used as the var coordinate in the fifth watt, var coordinate pair, that, in combination with four other watt, var coordinate pairs, lets you enter an underexcitation limiting curve.

Table 11-21. Underexcitation Limiter Output Tag

Tag	Description
UEL_Active	This tag is set at 1 when the underexcitation limiter is active.

Protection Functions

General Protection

General protection input and output tags are listed and described in Table 11-22 (input) and Table 11-23 (outputs).

Table 11-22. General Protection Input Tag

Tag	Description
FltReset	This tag is used by the host Logix controller to indicate to the DECS-250 that it has observed a fault condition reported by the DECS-250 and wants the fault condition reset.

Table 11-23. General Protection Output Tags

Tag	Description
FltOut	Indicates that one of the configured protection faults has gone active
FltResetAck	Reports to the host Logix controller that the activation of the **FltReset** tag has been received by the DECS-250 and the protective fault has been cleard.

Loss of Excitation Protection

Loss of excitation protection input and output tags are listed and described in Table 11-24 (inputs) and Table 11-25 (output).

Table 11-24. Loss of Excitation Protection Input Tags

Tag	Description
LossExcFltOutEn	When this tag is a 1 in the configuration and a loss of excitation fault occurs (as defined by the **LossExc_I_Setpt** tag), the Fault relay is energized. When this tag is a 0 in the configuration, a loss of excitation condition has no effect on the Fault relay.
LossExc_I_Setpt	This tag configures the level of the DECS-250's dc output current that is considered to be the minimum needed to maintain generator synchronization when in parallel with other power sources such as a utility grid.
LossExc_I_TimeDly	Configures the length of time the DECS-250's excitation is below the loss of excitation current setpoint before the DECS-250 trips the generator offline by opening the generator breaker.

Table 11-25. Loss of Excitation Protection Output Tag

Tag	Description
LossExcFlt	Communicates the occurrence of a loss of excitation fault to the host Logix controller. A value of 1 indicates that a fault has occurred. The tag is latched until the host Logix controller resets it by setting the **FltReset** tag.

Shorted Excitation Output Protection

The shorted excitation output protection output tag is listed and described in TABLE.

Table 11-26. Shorted Excitation Output Tag

Tag	Description
Spare2	Indicates when the excitation output short-circuit protection is active. When this tag is a 1, it indicates that a shorted output exists and the excitation current output has been clamped to a very low level. The tag is reset by either setting the tag **SoftwareExcEN** at 0 or by cycling the DECS-250 control power.

Overexcitation Voltage Protection

Overexcitation voltage protection input and output tags are listed and described in Table 11-27 (inputs) and Table 11-28 (outputs).

Table 11-27. Overexcitation Voltage Protection Input Tags

Tag	Description
OvrExcFltOutEn	When this tag is a 1 in the configuration and an overexcitation fault occurs (as defined by the **OvrExcV_Setpt** tag), the Fault relay is energized. When this tag is a 0 in the configuration, an overexcitation condition has no effect on the Fault relay.
OvrExcV_Setpt	Configures the overexcitation voltage setpoint that the DECS-250 uses to recognize when an overexcitation condition is present. When the condition occurs, the DECS-250 starts timing toward a trip based on the overexcitation time delay.
OvrExcV_TimeDly	Configures the time to trip the unit once the overexcitation voltage setpoint has been exceeded.

Table 11-28. Overexcitation Voltage Protection Output Tags

Tag	Description
OvrExcFlt	Communicates the occurrence of an overexcitation fault to the host Logix controller. When this tag is a 1, it indicates that a fault has occurred. The tag is latched until the host Logix controller resets it by setting the **FltReset** tag.

Generator Overvoltage Protection

Generator overvoltage protection input and output tags are listed and described in Table 11-29 (inputs) and Table 11-30 (output).

Table 11-29. Generator Overvoltage Protection Input Tags

Tag	Description
Ovr_V_FltOutEn	When this tag is a 1 in the configuration and an overvoltage fault occurs (as defined by the **Ovr_V_Setpt** tag), the Fault relay is energized. When this tag is a 0 in the configuration, an overvoltage condition has no effect on the Fault relay.
Ovr_V_Setpt	Configures the generator overvoltage setpoint that the DECS-250 uses to recognize when an overvoltage condition is present and starts timing to trip based on the overvoltage time delay.
Ovr_V_TimeDly	Configures the time to shut down the unit once the generator overvoltage setpoint has been exceeded.

Table 11-30. Generator Overvoltage Protection Output Tags

Tag	Description
Ovr_V_Flt	Communicates the occurrence of an overvoltage fault to the host Logix controller. When this tag is a 1, it indicates that a fault has occurred. The tag is latched until the host Logix controller resets it by setting the **FltReset** tag.

Generator Undervoltage Protection

Generator undervoltage protection input and output tags are listed and described in Table 11-31 (inputs) and Table 11-32 (output).

Table 11-31. Generator Undervoltage Protection Input Tags

Tag	Description
Undr_V_FltOutEn	When this tag is a 1 in the configuration and an undervoltage fault occurs (as defined by the **Undr_V_Setpt** tag), the Fault relay is energized. When this tag is a 0 in the configuration, an undervoltage condition has no effect on the Fault relay.
Undr_V_Setpt	Configures the generator undervoltage setpoint that the DECS-250 uses to recognize when an undervoltage condition is present and starts timing to trip based on the overvoltage time delay.
Undr_V_TimeDly	Configures the time to shut down the unit once the generator undervoltage setpoint has been exceeded.
EngineIdle	Setting this tag to 1 enables soft start mode and disables underfrequency, undervoltage, and loss of PMG protection until the generator is at rated speed.

Table 11-32. Generator Undervoltage Protection Output Tag

Tag	Description
Undr_V_Flt	Communicates the occurrence of an undervoltage fault to the host Logix controller. When this tag is a 1, it indicates that a fault has occurred. The tag is latched until the host Logix controller resets it by setting the **FltReset** tag.

Loss of Sensing Input Protection

The loss of sensing input protection input and output are listed and described in Table 11-33 (input) and Table 11-34 (output).

Table 11-33. Loss of Sensing Input Protection Input Tag

Tag	Description
LossSensingFltOutEn	When this tag is a 1 in the configuration and a loss of sensing fault occurs, the Fault relay energizes. When this tag is a 0 in the configuration, a loss of sensing condition has no effect on the Fault relay.

Table 11-34. Loss of Sensing Input Protection Output Tag

Tag	Description
LossSensingFlt	Communicates the occurrence of a loss of sensing fault to the host Logix controller. When this tag is a 1, it indicates that a fault has occurred. The tag is latched until the host Logix controller resets it by setting the **FltReset** tag.

Loss of Operating Power Protection

The loss of operating power protection input and output are listed and described in Table 11-35 (input) and Table 11-36 (output).

Table 11-35. Loss of Operating Power Protection Input Tag

Tag	Description
LossPMGFltOutEn	When this tag is a 1 in the configuration and a loss of PMG fault occurs, the Fault relay energizes. When this tag is a 0 in the configuration, a loss of sensing condition has no effect on the Fault relay.

Table 11-36. Loss of Operating Power Protection Output Tag

Tag	Description
LossPMGFlt	Communicates the occurrence of a loss of PMG fault to the host Logix controller. When this tag is a 1, it indicates that a fault has occurred. The tag is latched until the host Logix controller resets it by setting the **FltReset** tag.

Reverse Var Protection

Reverse var protection inputs and outputs are listed and described in Table 11-37 (inputs) and Table 11-38 (output).

Table 11-37. Reverse Var Protection Input Tags

Tag	Description
RevVARFltOutEn	When this tag is a 1 in the configuration and a reverse var fault occurs (as defined by the **Rev_kVAR_Setpt** tag), the Fault relay is energized. When this tag is a 0 in the configuration, a reverse var condition has no effect on the Fault relay.
Rev_kVAR_Setpt	Configures the generator reverse kvar setpoint at which the DECS-250 recognizes a reverse kvar (loss of excitation) condition is present and starts timing to trip based on the reverse kvar fault delay setting.
Rev_kVAR_TimeDly	Configures the time to shut down/annunciate once the generator reverse kvar setpoint has been exceeded.

Table 11-38. Reverse Var Protection Output Tag

Tag	Description
RevVARFlt	Communicates the occurrence of a reverse var fault to the host Logix controller. When this tag is a 1, it indicates that a fault has occurred. The tag is latched until the host Logix controller resets it by setting the **FltReset** tag.

Definite Time Overfrequency Protection

Definite time overfrequency protection inputs and outputs are listed and described in Table 11-39 (inputs) and Table 11-40 (output).

Table 11-39. Definite Time Overfrequency Protection Input Tage

Tag	Description
OvrFrequFltOutEn	When this tag is a 1 in the configuration and an overfrequency fault occurs (as defined by the **OvrFreqSetpt** tag), the Fault relay is energized. When this tag is a 0 in the configuration, an overfrequency condition has no effect on the Fault relay.
OvrFreqSetpt	Configures the generator overfrequency setpoint at which the DECS-250 recognizes an overfrequency condition is present and starts timing to trip based on the overfrequency time delay setting.
OvrFreqTimeDly	Configures the time to shut down/annunciate once the generator overfrequency setpoint has been exceeded.

Table 11-40. Definite Time Underfreuqncy Protection Output Tag

Tag	Description
UndrFreqFlt	Communicates the occurrence of an underfrequency fault to the host Logix controller. When this tag is a 1, it indicates that a fault has occurred. The tag is latched until the host Logix controller resets it by setting the **FltReset** tag.

Reverse Power Protection

Reverse power protection inputs and outputs are listed and described in Table 11-41 (inputs) and Table 11-42 (output).

Table 11-41. Reverse Power Protection Input Tags

Tag	Description
RevPwrFltOutEn	When this tag is a 1 in the configuration and a reverse power fault occurs (as defined by the **Rev_kW_Setpt** tag), the Fault relay is energized. When this tag is a 0 in the configuration, a reverse power condition has no effect on the Fault relay.
Rev_kW_Setpt	Configures the generator reverse kW setpoint at which the DECS-250 recognizes a reverse power condition is present and starts timing to trip based on the reverse kW time delay setting.
Rev_kW_TimeDly	Configures the time to shut down/annunciate once the generator reverse kW setpoint has been exceeded.

Table 11-42. Reverse Power Protection Output Tag

Tag	Description
RevPwrFlt	Communicates the occurrence of a reverse power fault to the host Logix controller. When this tag is a 1, it indicates that a fault has occurred. The tag is latched until the host Logix controller resets it by setting the **FltReset** tag.

Phase Rotation Check Protection

The phase rotation check protection input and output are listed and described in Table 11-43 (input) and Table 11-44 (output).

Table 11-43. Phase Rotation Check Protection Input Tag

Tag	Description
PhRotFltOutEn	When this tag is a 1 in the configuration and a phase rotation fault occurs, the Fault relay energizes. When this tag is a 0 in the configuration, phase rotation has no effect on the Fault relay.

Table 11-44. Phase Rotation Check Protection Output Tag

Tag	Description
PhRotFlt	Communicates the occurrence of a phase rotation fault to the host Logix controller. When this tag is a 1, it indicates that a fault has occurred. The tag is latched until the host Logix controller resets it by setting the **FltReset** tag.

Generator Overcurrent Protection

The generator overcurrent protection inputs and output are listed and described in Table 11-45 (inputs) and Table 11-46(output).

Table 11-45. Generator Overcuttent Protection Input Tags

Tag	Description
Ovr_I_FltOutEn	When this tag is a 1 in the configuration and an overcurrent fault occurs (as defined by the **Ovr_I_Setpt** tag), the Fault relay energizes. When this tag is a 0 in the configuration, a loss of sensing condition has no effect on the Fault relay.
Ovr_I_Setpt	Configures the threshold that the DECS-250 uses to recognize when a generator overcurrent condition exists. When the condition occurs, the DECS-250 starts timing toward a trip based on the selected overcurrent curve and time dial.
Ovr_I_TimeDial	Configures the tripping time in relationship to the magnitude of the actual current applied to the DECS-250.
Ovr_I_Curve	Configures the time overcurrent characteristic curve that is used by the overcurrent function of the DECS-250.
Ovr_I_VrestSetpt	Allows the time overcurrent characteristic to be modified based on the amount of generator voltage applied to the DECS-250.

Table 11-46. Generator Overcurrent Protection Output Tag

Tag	Description
Ovr_I_Flt	Communicates the occurrence of an overcurrent fault to the host Logix controller. When this tag is a 1, it indicates that a fault has occurred. The tag is latched until the host Logix controller resets it by setting the **FltReset** tag.

Synchronizing

Synchronizing input and output tags are listed and described in Table 11-47 (inputs) and Table 11-48 (outputs).

Table 11-47. Synchronizing Input Tags

Tag	Description
AutoSyncEn	Configures the DECS-250 to perform automatic generator synchronization. This is one of three synchronization modes, each selected by their respective tag. Only one can be active or the **SyncModeConflict** tag is activated and the synchronization fails (indicated by the **SyncFailure** tag.)
CheckSyncEn	Configures the DECS-250 to perform synchronization check. This is one of three synchronization modes, each selected by their respective tag. Only one can be active or the **SyncModeConflict** tag is activated and the synchronization fails (indicated by the **SyncFailure** tag.)
PermissiveSyncEn	Configures the DECS-250 to perform permissive synchronization. This is one of three synchronization modes, each selected by their respective tag. Only one can be active or the **SyncModeConflict** tag is activated and the synchronization fails (indicated by the **SyncFailure** tag.)
InitiateSync	Setting this tag causes the DECS-250 to begin a synchronization sequence. This bit must stay set throughout synchronization or the sequence is terminated.
SyncFreqHiLim	Sets the upper limit frequency (in Hz) that is considered acceptable for synchronization of two buses.
SyncFreqLoLim	Sets the lower limit frequency (in Hz) that is considered acceptable for synchronization of two buses.
SyncV_HiLim	Sets the upper limit voltage (in percent) that is considered acceptable for synchronization of two buses.
SyncV_LoLim	Sets the lower limit voltage (in percent) that is considered acceptable for synchronization of two buses.
SyncPhHiLim	Sets the upper limit phase (in degrees) that is considered acceptable for synchronization of two buses.
SyncAcceptDly	Configures the time delay that is required to allow for breaker closing. This setting is based on the time the frequency, voltage, and phase angle of the generator and bus have been matched.
BusRotABC_ACB_Select	Configures the reference bus rotation sequence
GenRotABC_ACB_Select	Configures the generator bus rotation sequence
DeadBusGenFreqLoLim	Configures the minimum frequency that must be present on the generator to allow the breaker to close under a dead bus condition.
DeadBusGenFreqHiLim	Configures the maximum frequency that must be present on the generator to allow the breaker to close under a dead bus condition.
DeadBusGenV_LoLim	Configures the minimum voltage that must be present on the generator to allow the breaker to close under a dead bus condition.

Tag	Description
DeadBusGenV_HiLim	Configures the maximum voltage that must be present on the generator to allow the breaker to close under a dead bus condition.
DeadBusClosureEn	Setting this tag to 1 allows the generator to achieve breaker closure with a dead bus.
BusA_PhOffset	Configures a phase angle added to the measured bus A phase angle. It is used to compensate for phase shift across sensing transformers.
BusA_V_Scaler	Configures a multiplier for the measured bus A voltage. It is used to compensate for ratio error across sensing transformers.
BusB_PhOffset	Configures a phase angle added to the measured bus B phase angle. It is used to compensate for phase shift across sensing transformers.
BusB_V_Sclaer	Configures a multiplier for the measured bus B voltage. It is used to compensate for ratio error across sensing transformers.
BusA_B_Select	Selects which reference bus the DECS-250 attempts to synchronize with.
V_Match_Gain	Sets the proportional gain parameter for voltage matching mode.

Table 11-48. Synchronizing Output Tags

Tag	Description
SyncDeadBus	Indicates that all conditions have been achieved to allow a dead bus synchronization
AutoSync	Follows the **AutoSyncEn** tag setting in the Scheduled Write tag
CheckSync	Follows the **CheckSyncEn** tag setting in the Scheduled Write tag
PermissiveSync	Follows the **PermissiveSyncEn** tag setting in the Scheduled Write tag
SyncFailure	Indicates that a synchronization attempt has failed
UndefinedSyncMode	Indicates that a synchronization was initiated when none of the synchronization modes were asserted
SyncModeConflict	Indicates that more than one synchronization mode was selected
BusRot_ABC_ACB	Reports the rotation sequence of the reference bus in three-phase metering. In single-phase metering, ABC rotation (0) is reported.
GenRot_ABC_ACB	Reports the rotation sequence of the generator bus in three-phase metering. In single-phase metering, ABC rotation (0) is reported.
PhRotMatch	When synchronizing two buses, this tag reports that the phase rotation is acceptable for synchronizing.
V_Match	Reports that the voltage difference between two buses to be synchronized is within the configured, acceptable range.
FreqMatch	Reports that the frequency difference between two buses to be synchronized is within the configured, acceptable range.

Tag	Description
PhMatch	Reports that the phase difference between two buses to be synchronized is within the configured, acceptable range.
V_MatchErr	Reports the percentage difference in voltage between two buses to be synchronized.
FreqMatchErr	Reports the frequency difference between two buses to be synchronized.
PhMatchErr	Reports the phase difference between two buses to be synchronized.
CloseBusA_Brkr	When this tag is 1, it indicates that synchronization has reached a state where it is acceptable to close the breaker to Bus A.
CloseBusB_Brkr	When this tag is 1, it indicates that synchronization has reached a state where it is acceptable to close the breaker to Bus B.
Raise_V	Indicates to the host Logix controller that the synchronizing bus has a lower voltage level than that of the reference bus.
Lower_V	Indicates to the host Logix controller that the synchronizing bus has a higher voltage level than that of the reference bus.
Raise_Freq	Indicates to the host Logix controller that the synchronizing bus is producing voltage at a frequency lower than that of the reference bus.
Lower_Freq	Indicates to the host Logix controller that the synchronizing bus is producing voltage at a frequency higher than that of the reference bus.
Raise_Ph	Indicates to the host Logix controller that the synchronizing bus is producing a voltage that is between 0 and 180 degrees behind the reference bus.
Lower_Ph	Indicates to the host Logix controller that the synchronizing bus is producing a voltage that is between 0 and 180 degrees ahead of the reference bus.
ActiveBusA_B	Indicates which reference bus is being monitored

Load Sharing

Load sharing input and output tags are listed and described in Table 11-49 (inputs) and Table 11-50 (outputs).

Table 11-49. Load Sharing Input Tags

Tag	Description
kVAR_LS_BridgeEn	Reserved for future use
kVAR_LS_En	Reserved for future use
kW_LS_BridgeEn	When this tag is set at 1, the DECS-250 uses the value of **KWAnalogTargetPUValue** as the kW Load Share setpoint to provide appropriate bias to the analog devices connected to the LS lines.
kW_LS-EN	When this tag is set to 1, the DECS-250 enables the kilowatt load sharing function.
kW_LS_OutV	Reserved for future use

Tag	Description
kVAR_LS_OutV	Reserved for future use
LS_FS_V	Sets the voltage of the load sharing output when the generator is producing 1 pu kVA. The base for this calculation is the calculated generator kVA.
LSRate	Configures the time required for the load sharing output to change the per unit amount defined above.
LSLimit	Configures the amount of per unit change allowed in the load sharing output per unit of time defined below.
KWAnalogTargetPUValue	The value of this tag is used to provide the bias to the load sharing lines when the **kW_LS_BridgeEN** tag is set to 1.
KWDigitalTargetPUValue	Reserved for future use
KVARAnalogTargetPUValue	Reserved for future use
kVARDigitalTarget PUValue	Reserved for future use

Table 11-50. Load Sharing Output Tags

Tag	Description
kVAR_LS_Active	This tag follows the **kVAR_LS_En** tag setting in the Scheduled Write tag.
kW_LS_Active	This tag follows the **kW_LS_En** tag setting in the Scheduled Write tag.
LS_Err	Reports the load sharing error that is the difference between **kW_LS_OutV** and **kW_LS_InputV**.
kW_L_InputV	Reports the voltage present at the load sharing terminals.
kW_PU_Load	Reports the total pu kVA being produced by the active phases of the generator. The base for this calculation is the configured generator kVA.
kW_AnalogPU_Load	Reports the value of the voltage present at the load sharing terminals divided by the configured full-scale voltage. It represents the system per unit load.
kVAR_LS_InputV	The product of the rms magnitude of the reactive portion of the differential current flowing in the input CT and the generator terminal voltage. The product is divided by the rated kVA to determine the reported value for this tag.
kVAR_PU_Load	Reports the total pu kvar being produced by the active phases of the generator. The base for this calculation is the configured generator kVA.
kVAR_AnalogPU_Load	Reports the difference between the **KVAR_PU_Load** and **kVAR_LS_InputV**.

Metering

Metering input and output tags are listed and described in Table 11-51 (inputs) and Table 11-52 (outputs).

Table 11-51. Metering Input Tags

Tag	Description
Set_kW_Hrs	When this tag is set to 1, the value of tag **kWHoursPreset** is loaded into the **kW_Hrs** counter.
Set_kVAR_Hrs	When this tag is set to 1, the value of tag **kVARHoursPreset** is loaded into the **kVAR_Hrs** counter.
Set_kVA_Hrs	When this tag is set to 1, the value of tag **kVAHoursPreset** is loaded into the **kVA_Hrs** counter.
kWHoursPreset	This value is loaded into the **kW_Hrs** counter when **Set_kW_Hrs** is asserted.
kVARHoursPreset	This value is loaded into the **kVAR_Hrs** counter when **Set_kW_Hrs** is asserted.
kVAHoursPreset	This value is loaded into the **kVA_Hrs** counter when **Set_kW_Hrs** is asserted.

Table 11-52. Metering Output Tags

Tag	Description
AvgPF	Reports the average power factor of the active phases of the generator.
PhA_PF	Reports the power factor of generator phase A
PhB_PF	Reports the power factor of generator phase B
PhC_PF	Reports the power factor of generator phase C
Total_kVA	Reports the total kVA being produced by the active phases of the generator
PhA_kVA	Reports the kVA produced by generator phase A
PhB_kVA	Reports the kVA produced by generator phase B
PhC_kVA	Reports the kVA produced by generator phase C
Total_kW	Reports the total kW being produced by the active phases of the generator
PhA_kW	Reports the kW being produced by generator phase A
PhB_kW	Reports the kW being produced by generator phase B
PhC_kW	Reports the kW being produced by generator phase C
Total_kVAR	Reports the total kvar being produced by the active phases of the generator
PhA_kVAR	Reports the kvar being produced by generator phase A
PhB_kVAR	Reports the kvar being produced by generator phase B
PhC_kVAR	Reports the kvar being produced by generator phase C
Avg_I	Reports the average current of the active phases of the generator
PhA_I	Reports the current in generator phase A
PhB_I	Reports the current in generator phase B
PhC_I	Reports the current in generator phase C

Tag	Description
AvgLLGenV	Reports the average line-to-line voltage of the active phases of the generator
PhAB_GenV	Reports he line-to-line voltage between generator phases A and B
PhBC_GenV	Reports the line-to-line voltage between generator phases B and C
PhCA_GenV	Reports the line-to-line voltage between generator phases C and A
AvgLN_GenV	Reports the average line-to-neutral voltage of the active phases of the generator
PhA_GenV	Reports the voltage from generator phase A to Neutral
PhB_GenV	Reports the voltage from generator phase B to Neutral
PhC_GenV	Reports the voltage from generator phase C to Neutral
AvgLL_BusV	Reports the average line-to-neutral voltage of the active phases of the bus
PhA_BusV	Reports the voltage from bus phase A to Neutral
PhB_BusV	Reports the voltage from bus phase B to Neutral
PhC_BusV	Reports the voltage from bus phase C to Neutral
PhCA_BusV	Reports the line-to-line voltage between bus phases C and A*
BusB_V	Reference bus voltage for the B reference in a dual breaker application
Exc_V	Reports the excitation voltage
Exc_I	Reports the excitation current
ExcRipple	Reports the ripple component of the excitation current
kW_Hrs	Reports the cumulative kilowatthours produced by the generator
kVAR_Hrs	Reports the cumulative kvarhours produced by the generator
kVA_Hrs	Reports the cumulative kVAhours produced by the generator
GenFreq	Reports the generator frequency
BusFreq	Reports the bus frequency
V_AdjustOffset	Reports the voltage on the DECS-250 auxiliary input terminals
BusV_Present	Indicates the presence of voltage on the reference bus
GenV_Present	Indicates if generator voltage is being developed
FreqLessThan10Hz	Indicates that the generator frequency is less than 10 Hz

* When configured as dual breaker, Bus A voltage is available on the PhA_BusV and PhCA_BusV tags.

Redundancy

Redundancy input and output tags are listed and described in Table 11-53 (inputs) and Table 11-54 (outputs).

Table 11-53. Redundancy Input Tags

Tag	Description
RedndtTrackRate	This tag configures the rate at which the tracking mode of a redundant DECS-250 matches the primary DECS-250's active excitation control mode.
RedndtTrackDly	Changes the initial delay of the tracking function of a redundant DECS-250 to prevent the tracing mode from adjusting the non-active modes into an undesirable condition.

Table 11-54. Redundancy Output Tags

Tag	Description
CGCM_Flt	Indicates that the DECS-250 has detected an internal failure
CGCMInControl	Indicates that the DECS-250 has hardware and software excitation enabled
Spare1	When operating in redundant mode, this tag indicates the DECS-250 has assumed the role of primary controller and is supplying excitation to the generator.

Highland, Illinois USA
Tel: +1 618.654.2341
Fax: +1 618.654.2351
email: basler_info@basler.com

Suzhou, P.R. China
Tel: +86 512.8227.2888
Fax: +86 512.8227.2887
email: basler_chinainfo@littelfuse.com